KXG series

SURUGA SEIKI

CAVE-X POSITIONER

X軸直線滾珠導軌：KXG06020/KXG06030

KXG06020

KXG06030

對應無馬達

RoHS

詳情見▶P.009

■驅動部塗抹有潔淨潤滑油

款型 KXG06 選擇代碼 020 - 可選代碼 C □

1 2 3

▶電纜 P.1-207～
▶電氣規格見P.1-051～

1 移動量

020	20mm
030	30mm

2 馬達選項

代碼	規格
C	標準
F	高扭矩
G	高分辨率
MA	帶電磁制動(驅動器套裝)
PA	α步進(驅動器套裝)

※代碼MA・PA為驅動器等與電纜的套裝。
※馬達選項詳情敬請參照▶P.1-051。

3 附屬電纜選項

代碼	規格	電纜款型
A	2m	D214-2-2E
B	2m單側散線	D214-2-2EK
C	4m	D214-2-4E
D	4m單側散線	D214-2-4EK
E	僅聯接頭(無電纜)	–
F	可撓式電纜2m	D214-2-2R
G	可撓式電纜2m單側散線	D214-2-2RK
H	可撓式電纜4m	D214-2-4R
J	可撓式電纜4m單側散線	D214-2-4RK
M	附電磁制動用電纜	–
P	α步進用電纜	
無記號	無電纜(標準)	–

※單側散線為反滑台側。
※代碼M、P不可選擇無電纜。
電纜詳情敬請確認▶P.1-207、209。
※請選擇"代碼A、C、F或H"時步進電機控制器 連接(DS102/112)

【請注意】
可使用的電纜因馬達不同，敬請在對應表上確認。
本體不帶電纜。 敬請務必選定代碼。

馬達・電纜對應表	馬達代碼	電纜代碼
	C、F、G	無記號、A～H、J
	MA	M
	PA	P

配置

款型		KXG06020-C	KXG06020-F	KXG06020-G	KXG06030-C	KXG06030-F	KXG06030-G
機械規格	移動量	20mm			30mm		
	滑台面尺寸	60×60mm			60×70mm		
	進給(滾珠絲桿)	φ8導程1					
	導軌	直線滾珠導軌					
	主材質一表面處理	不鏽鋼一無電解鍍鎳處理					
	自重	0.78kg	0.87kg	0.78kg	0.9kg	0.99kg	0.9kg
精度規格	分辨率(脈衝) Full/Half	2μm/1μm		1μm/0.5μm	2μm/1μm		1μm/0.5μm
	分辨率(脈衝) 微步進	0.1μm(1/20分割時)		0.05μm(1/20分割時)	0.1μm(1/20分割時)		0.05μm(1/20分割時)
	MAX速度	20mm/sec	30mm/sec	20mm/sec	20mm/sec	30mm/sec	20mm/sec
	單方向定位精度	5μm以內					
	反復定位精度	±0.5μm以內					
	耐荷重	5kgf【49N】					
	力矩剛性	仰俯0.08/橫擺0.05/側傾0.05[″/N・cm]					
	空轉	1μm以內					
	背隙	1μm以內					
	真直度	3μm以內					
	平行度	15μm以內					
	運動平行度	10μm以內					
	仰俯/橫擺	20″/15″以內					
感應器	極限感應器	有					
	原點感應器	有					
	狹縫原點感應器	–					
附屬螺絲(六角帶孔螺釘)		M4-12 4個					

※ 配置因馬達不同會有變化。詳情敬請參照▶P.1-213～。

馬達選配

C 標準馬達
馬達型號
C005C-90215P-1

F 高扭矩
馬達型號
PK525HPB-C1

G 高解析度
馬達型號
PK523HPMB-C1

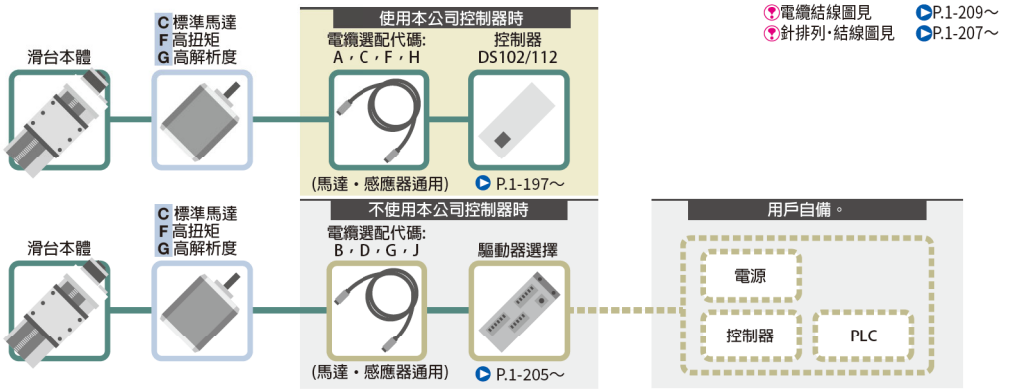

馬達選配

MA 帶電磁制動閥
馬達型號
PKE545MC-A1

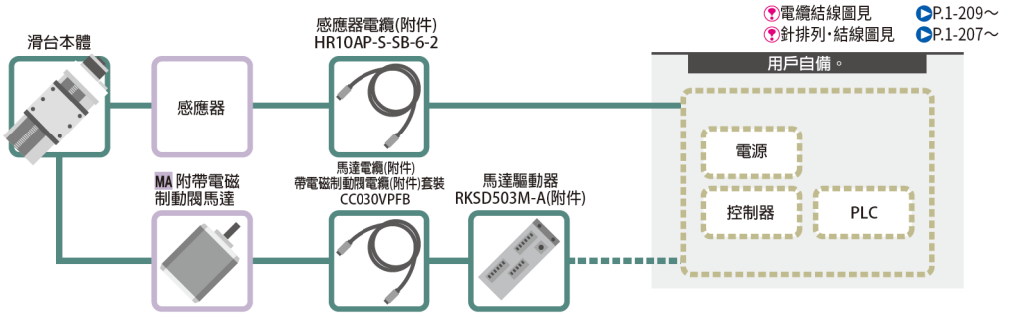

馬達選配

PA α步進
馬達型號
ARM24SAK

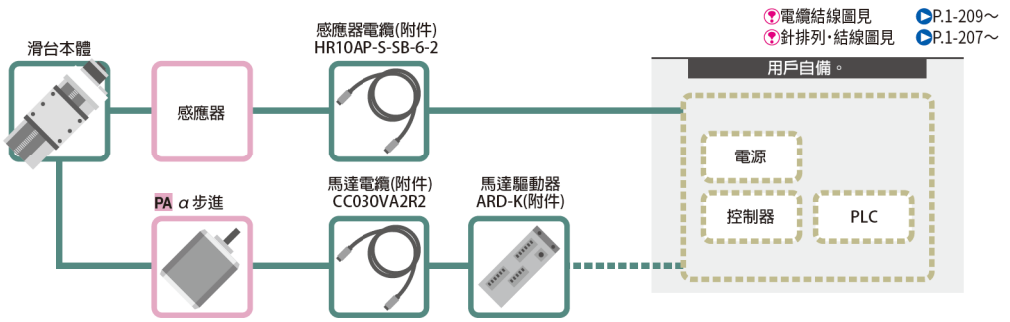

馬達代碼			C	F	G	MA	PA
特長			標準	高扭矩	高分辨率	帶電磁制動	防失步
類型			5相步進馬達　0.75A/相			5相 0.35A/相	α步進馬達
款型※			C005C-90215P-1	PK525HPB-C1	PK523HPMB-C1	PKE545MC-A1	ARM24SAK
分辨率	導程 1mm	Full/Half	2μm/1μm		1μm/0.5μm	2μm/1μm	1μm(1000P/R設定時)
		微步進(1/20分割時)	0.1μm		0.05μm	0.1μm	—
MAX速度	導程1mm		20mm/sec	30mm/sec	20mm/sec	25mm/sec	30mm/sec

※　款型為駿河精機獨創管理型式

CAVE-X POSITIONER

X軸直線滾珠導軌：KXG06020/KXG06030

外形尺碼圖

※圖片為示意圖

KXG06020-C

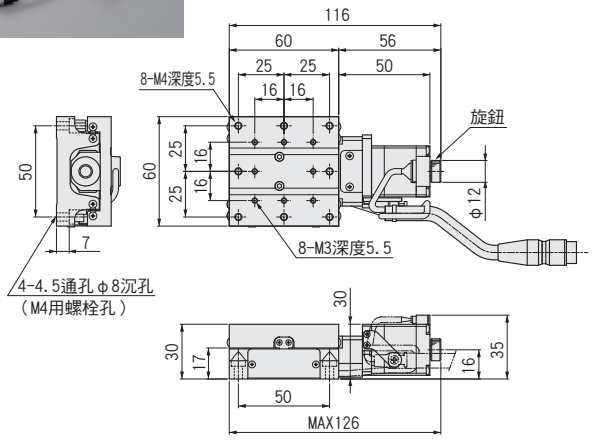

KXG06030-C

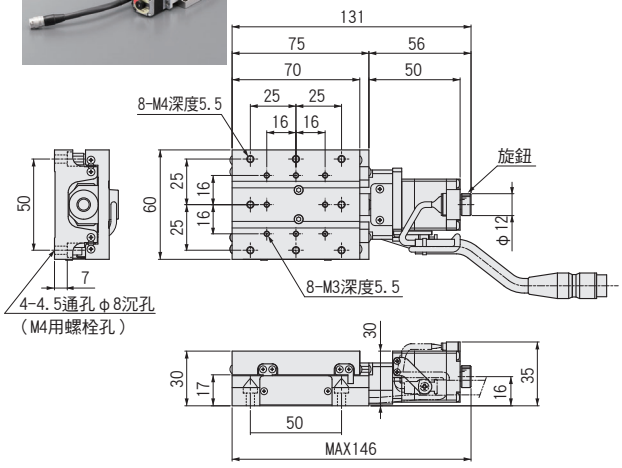

KXG06020-F

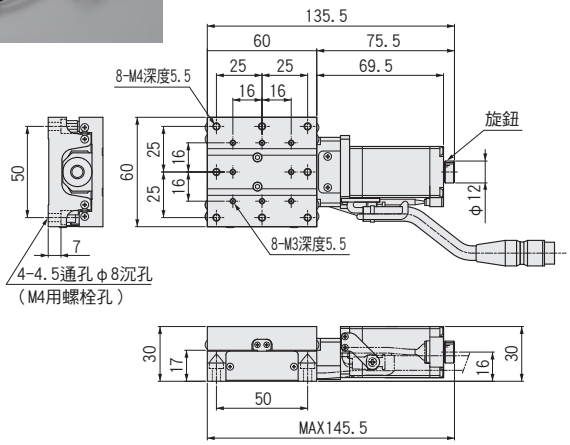

KXG06030-F

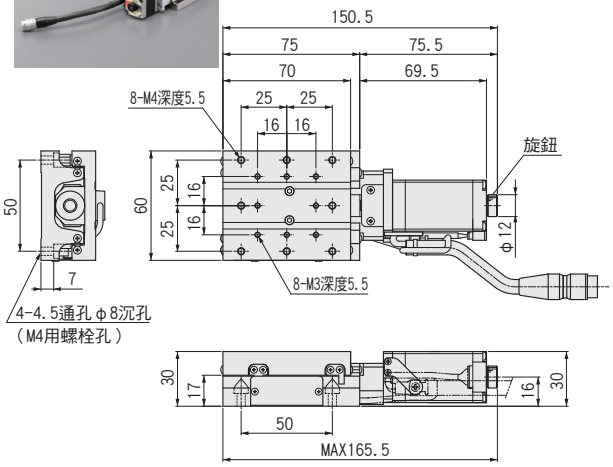

KXG06020-G

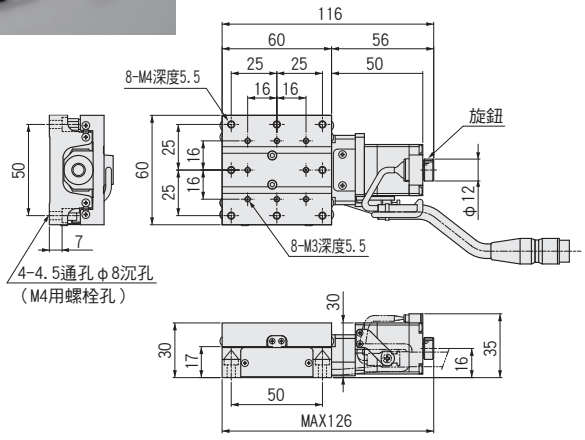

KXG06030-G

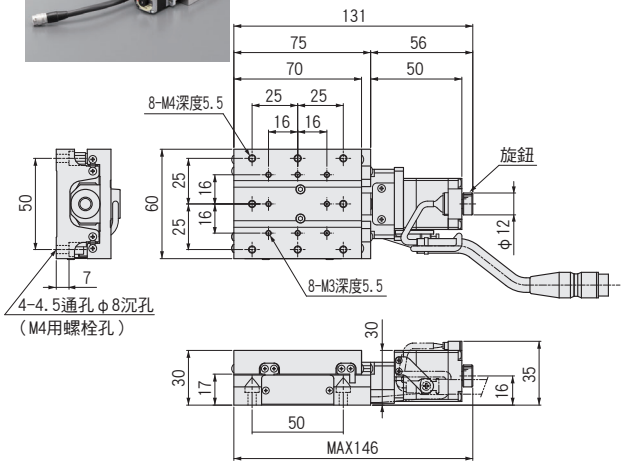

PART COMMUNITY CAD DATA SURUGA SEIKI CAD數據 3D・2D

外形尺碼圖

C 標準馬達
馬達款型 C005C-90215P-1

F 高扭矩
馬達款型 PK525HPB-C1

G 高分辨率
馬達款型 PK523HPMB-C1

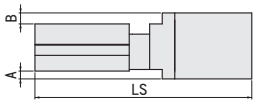

款型	C(標準)/F(高扭矩)/G(高分辨率)共通			C(標準)	F(高扭矩)	G(高分辨率)
	電機尺寸	A	B	LS		
KXG06020-□	□28	—	—	116	136	116
KXG06030-□				131	151	131

MA 帶電磁制動閥
馬達款型 PKE545MC-A1

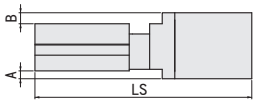

款型	MA(帶電磁制動)			C(標準)
	馬達尺寸	A	B	LS
KXG06020-MA	□42	5	7	164	116
KXG06030-MA				179	131

PA α步進
馬達款型 ARM24SAK

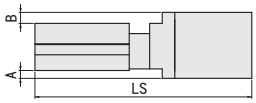

款型	PA(α步進)			C(標準)
	馬達尺寸	A	B	LS
KXG06020-PA	□28	—	—	129	116
KXG06030-PA				144	131

CAVE-X POSITIONER

XY軸直線滾珠導軌：KYG06020/KYG06030

KYG06020

KYG06030

RoHS

款型 選擇代碼 可選代碼

KYG06 020-C□

1 2 3

▶電纜 P.1-207～
▶電氣規格見P.1-051～

1 移動量

020	20mm
030	30mm

2 馬達選項

代碼	規格
C	標準
F	高扭矩
G	高分辨率
MA	帶制動（驅動器套裝）
PA	α步進（驅動器套裝）

※馬達選項詳情敬請參照▶P.1-051～。

3 附屬電纜選項

代碼	規格	電纜款型
A	2m	D214-2-2E
B	2m單側散線	D214-2-2EK
C	4m	D214-2-4E
D	4m單側散線	D214-2-4EK
E	僅聯接頭（無電纜）	–
F	可撓式電纜2m	D214-2-2R
G	可撓式電纜2m單側散線	D214-2-2RK
H	可撓式電纜4m	D214-2-4R
J	可撓式電纜4m單側散線	D214-2-4RK
M	帶制動用電纜	–
P	α步進用電纜	
無記號	無電纜（標準）	–

※代碼M、P不可選擇無電纜。
電纜詳情敬請確認▶P.1-207、209。
※請選擇“代碼A，C，F或H”
時步進電機控制器連接(DS102/112)

【請注意】
可使用的電纜因馬達不同，敬請在對應表上確認。
本體不帶電纜。敬請務必選定代碼。

馬達・電纜對應表	馬達代碼	電纜代碼
	C、F、G	無記號、A～H、J
	MA	M
	PA	P

配置

款型		KYG06020-C	KYG06020-F	KYG06020-G	KYG06030-C	KYG06030-F	KYG06030-G
機械規格	移動量	20mm			30mm		
	滑台面尺寸	60×60mm			60×70mm		
	進給(滾珠絲桿)	φ8導程1					
	導軌	直線滾珠導軌					
	主材質－表面處理	不鏽鋼－無電解鍍鎳處理					
	自重	1.56kg	1.74kg	1.56kg	1.8kg	1.98kg	1.8kg
精度規格	分辨率(脈衝) Full/Half	2μm/1μm		1μm/0.5μm	2μm/1μm		1μm/0.5μm
	分辨率(脈衝) 微步進	0.1μm(1/20分割時)		0.05μm(1/20分割時)	0.1μm(1/20分割時)		0.05μm(1/20分割時)
	MAX速度	20mm/sec	30mm/sec	20mm/sec	20mm/sec	30mm/sec	20mm/sec
	耐荷重	4kgf【39.2N】					
	運動直交度	10μm以內/全行程			15μm以內/全行程		
	仰俯/橫擺	20″/15″以內					
感應器	極限感應器	有					
	原點感應器	有					
	狹縫原點感應器	–					
附屬螺絲(六角帶孔螺釘)		M4－12 4個					

單軸精度規格	單方向定位精度	5μm以內
	反復定位精度	±0.5μm以內
	空轉	1μm以內
	背隙	1μm以內
	真直度	3μm以內

※ 配置因馬達不同會有變化。詳情敬請參照 ▶P.1-213。

外形尺碼圖

PART COMMUNITY CAD DATA SURUGA SEIKI CAD數據 3D・2D

KYG06020-C

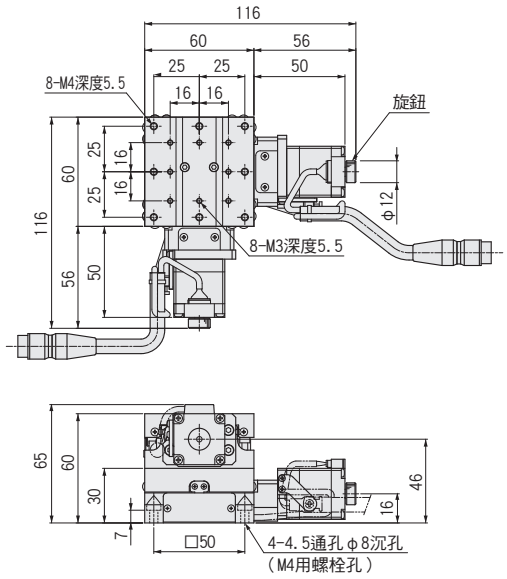

KYG06030-C

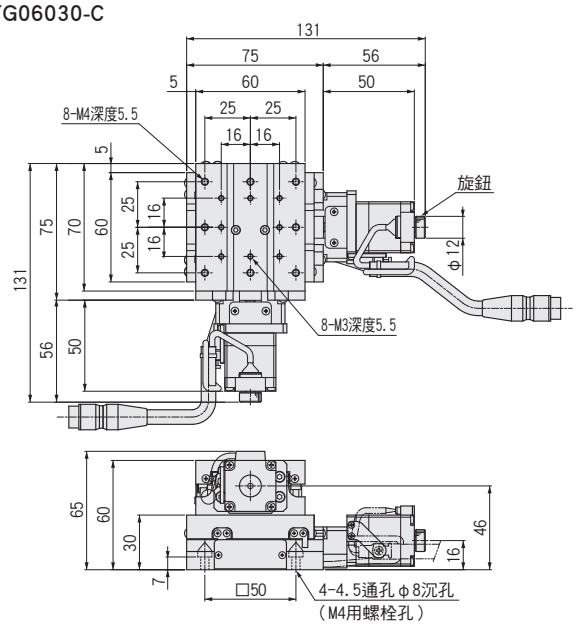

KYG06020-F

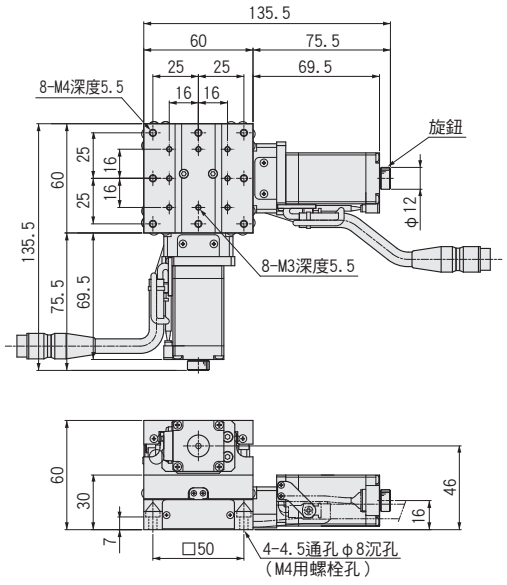

KYG06030-F

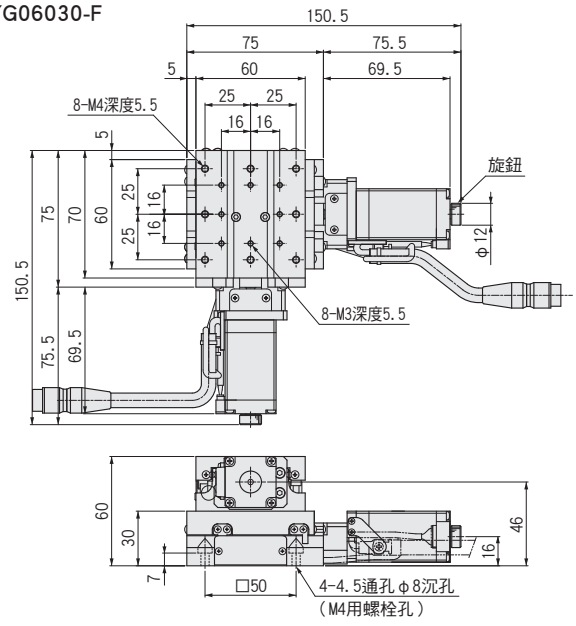

KYG06020-G

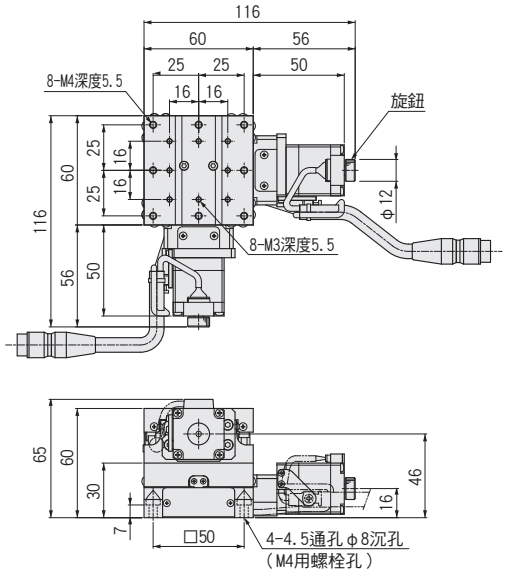

KYG06030-G

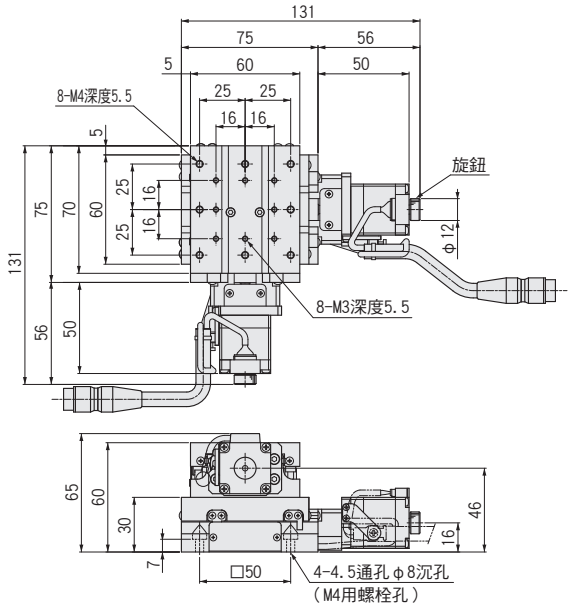

CAVE-X POSITIONER

Z軸直線滾珠導軌：KZG06020/KZG06030

KZG06020

KZG06030

RoHS

款型 / 選擇代碼 / 可選代碼

KZG06 020- C□

1 2 3

▶電纜 P.1-207～
▶電氣規格見P.1-051～

1 移動量

020	20mm
030	30mm

2 馬達選項

代碼	規格
C	標準
F	高扭矩
G	高分辨率
MA	帶制動(驅動器套裝)
PA	α步進(驅動器套裝)

※馬達選項詳情敬請參照▶P.1-051～。

3 附屬電纜選項

代碼	規格	電纜款型
A	2m	D214-2-2E
B	2m單側散線	D214-2-2EK
C	4m	D214-2-4E
D	4m單側散線	D214-2-4EK
E	僅聯接頭(無電纜)	–
F	可撓式電纜2m	D214-2-2R
G	可撓式電纜2m單側散線	D214-2-2RK
H	可撓式電纜4m	D214-2-4R
J	可撓式電纜4m單側散線	D214-2-4RK
M	帶制動用電纜	–
P	α步進用電纜	
無記號	無電纜(標準)	–

※代碼M、P不可選擇無電纜。
電纜詳情敬請確認▶P.1-207、209。
※請選擇"代碼A、C、F或H"
時步進電機控制器連接(DS102/112)

【請注意】
可使用的電纜因馬達不同，敬請在對應表上確認。
本體不帶電纜。 敬請務必選定代碼。

馬達・電纜對應表	馬達代碼	電纜代碼
	C、F、G	無記號、A～H、J
	MA	M
	PA	P

配置

款型		KZG06020-C	KZG06020-F	KZG06020-G	KZG06030-C	KZG06030-F	KZG06030-G
機械規格	移動量	20mm			30mm		
	滑台面尺寸	60×60mm			60×70mm		
	進給(滾珠絲桿)	φ8導程1					
	導軌	直線滾珠導軌					
	主材質ー表面處理	不鏽鋼ー無電解鍍鎳處理					
	自重	1.14kg	1.23kg	1.14kg	1.26kg	1.35kg	1.26kg
精度規格	分辨率(脈衝) Full/Half	2μm/1μm		1μm/0.5μm	2μm/1μm		1μm/0.5μm
	分辨率(脈衝) 微步進	0.1μm(1/20分割時)		0.05μm(1/20分割時)	0.1μm(1/20分割時)		0.05μm(1/20分割時)
	MAX速度	20mm/sec	30mm/sec	20mm/sec	20mm/sec	30mm/sec	20mm/sec
	耐荷重(勵磁時)	3kgf【29.4N】					
	垂直度	10μm以內/全行程			15μm以內/全行程		
	仰俯/橫擺	20"/15"以內					
感應器	極限感應器	有					
	原點感應器	有					
	狹縫原點感應器	ー					
附屬螺絲(六角帶孔螺釘)		M4ー10 4個					

單軸精度規格	單方向定位精度	5μm以內
	反復定位精度	±0.5μm以內
	空轉	1μm以內
	背隙	1μm以內
	真直度	3μm以內

※ 配置因馬達不同會有變化。詳情敬請參照 ▶ P.1-213。

外形尺碼圖

KZG06020-C

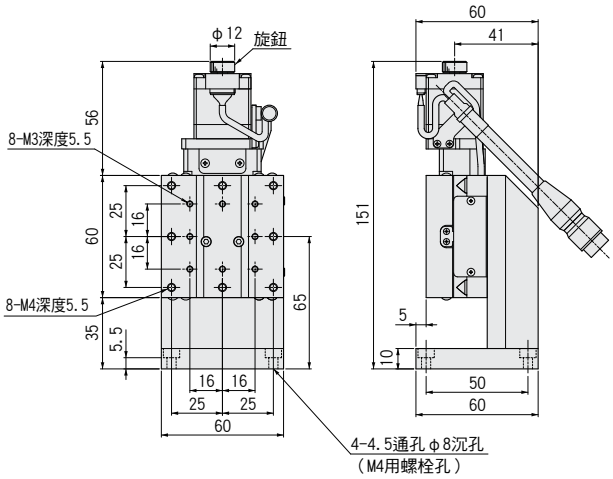

KZG06020-F

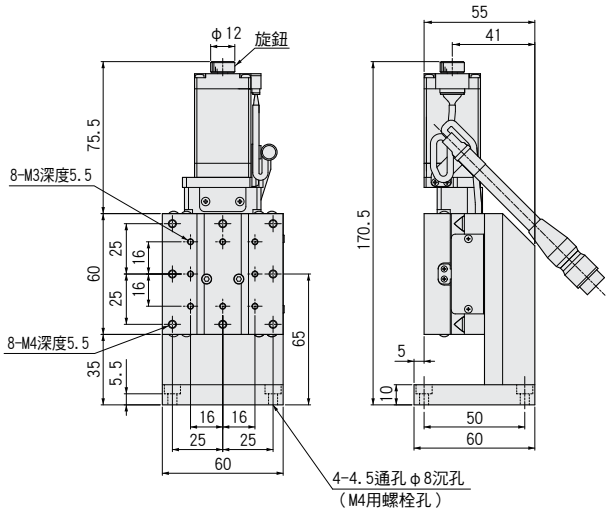

KZG06020-G

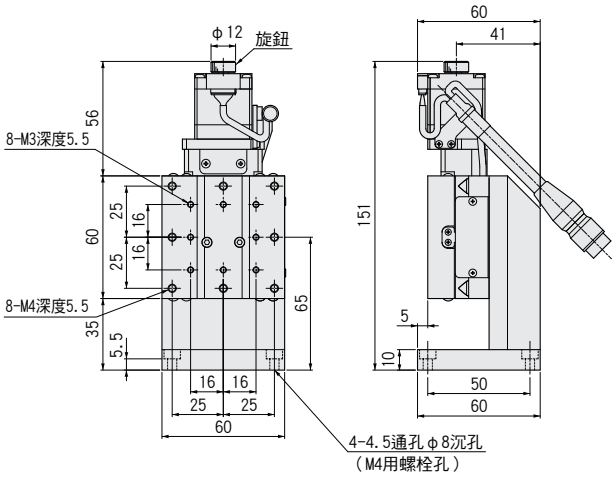

KZG06030-C

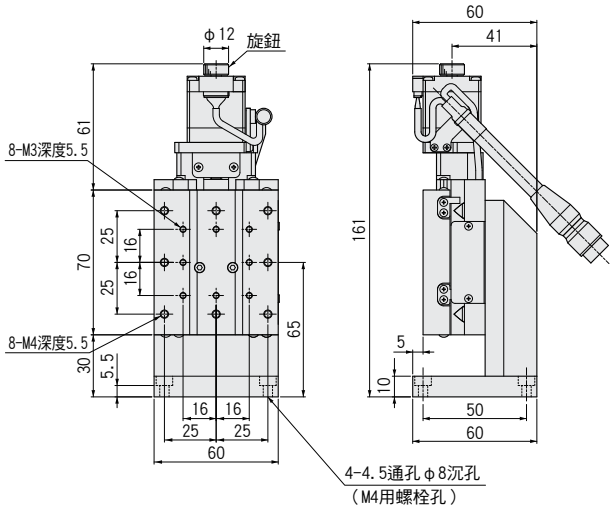

KZG06030-F

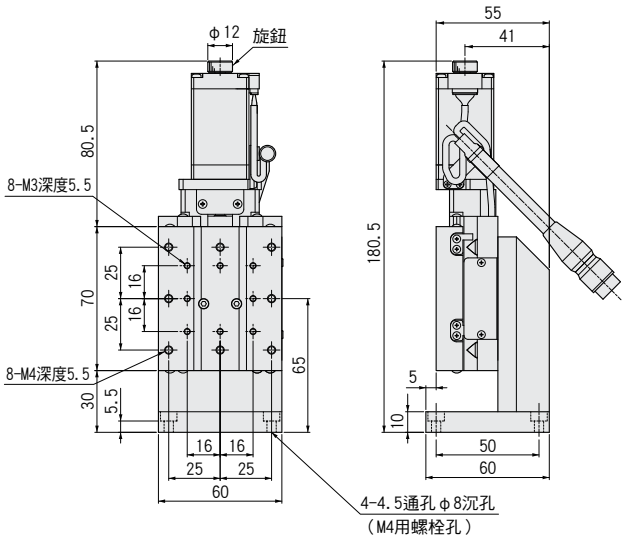

KZG06030-G

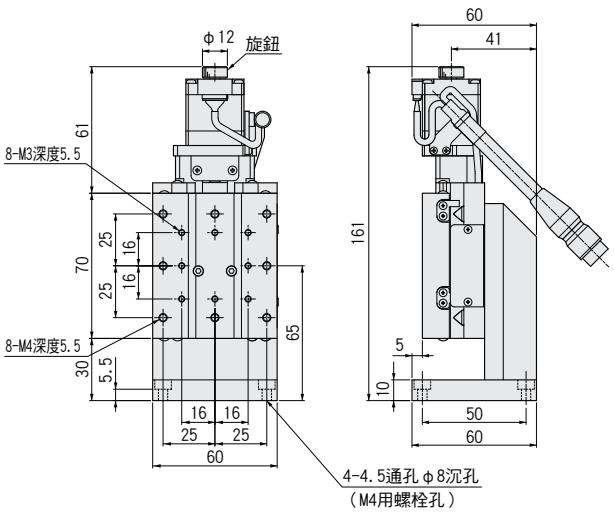

CAVE-X POSITIONER

XYZ軸直線滾珠導軌：KWG06020/KWG06030

KWG06020

KWG06030

RoHS

款型 | 選擇代碼 | 可選代碼

KWG06020-C□

1 2 3

▶電纜 P.1-207～
▶電氣規格見P.1-051～

1 行程

020	20mm
030	30mm

2 馬達選項

代碼	規格
C	標準
F	高扭矩
G	高分辨率
MA	帶制動(驅動器套裝)
PA	α步進(驅動器套裝)

※馬達選項詳情敬請參照▶P.1-051～。

3 附屬電纜選項

代碼	規格	電纜款型
A	2m	D214-2-2E
B	2m單側散線	D214-2-2EK
C	4m	D214-2-4E
D	4m單側散線	D214-2-4EK
E	僅聯接頭(無電纜)	–
F	可撓式電纜2m	D214-2-2R
G	可撓式電纜2m單側散線	D214-2-2RK
H	可撓式電纜4m	D214-2-4R
J	可撓式電纜4m單側散線	D214-2-4RK
M	附電磁制動用電纜	–
P	α步進用電纜	
無記號	無電纜(標準)	–

※代碼M、P不可選擇無電纜。
電纜詳情敬請確認▶P.1-207、209～。
※請選擇"代碼A，C，F或H"
時步進電機控制器連接(DS102/112)

【請注意】
可使用的電纜因馬達不同，敬請在對應表上確認。
本體不帶電纜。 敬請務必選定代碼。

馬達·電纜對應表	馬達代碼	電纜代碼
	C、F、G	無記號、A～H、J
	MA	M
	PA	P
	U	U

配置

款型		KWG06020-C	KWG06020-F	KWG06020-G	KWG06030-C	KWG06030-F	KWG06030-G
機械規格	移動量	20mm			30mm		
	滑台面尺寸	60×60mm			60×70mm		
	進給(滾珠絲桿)	φ8導程1					
	導軌	直線滾珠導軌					
	主材質ー表面處理	不鏽鋼ー無電解鍍鎳處理					
	自重	2.7kg	2.97kg	2.7kg	3.06kg	3.33kg	3.06kg
精度規格	分辨率(脈衝) Full/Half	2μm/1μm		1μm/0.5μm	2μm/1μm		1μm/0.5μm
	分辨率(脈衝) 微步進	0.1μm(1/20分割時)		0.05μm(1/20分割時)	0.1μm(1/20分割時)		0.05μm(1/20分割時)
	MAX速度	20mm/sec	30mm/sec	20mm/sec	20mm/sec	30mm/sec	20mm/sec
	耐荷重	3kgf【29.4N】					
	垂直度	10μm以內/全行程			15μm以內/全行程		
	仰俯/橫擺	20"/15"以內					
感應器	極限感應器	有					
	原點感應器	有					
	狹縫原點感應器	ー					
附屬螺絲(六角帶孔螺釘)		M4ー12 4個					

單軸精度規格		
	單方向定位	5μm以內
	反復定位	±0.5μm以內
	空轉	1μm以內
	背隙	1μm以內
	真直度	3μm以內

※ 配置因馬達不同會有變化。詳情敬請參照 ▶ P.1-213。

外形尺碼圖

KWG06020-C

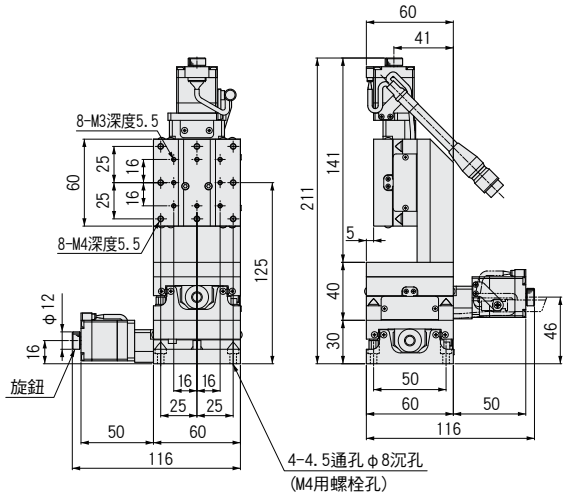

KWG06030-C

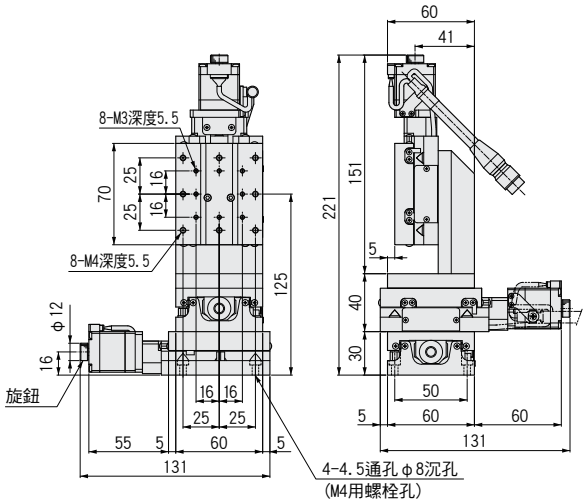

KWG06020-F

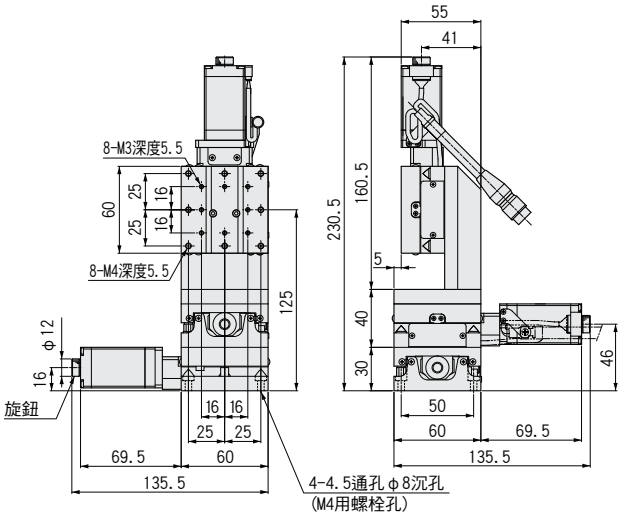

KWG06030-F

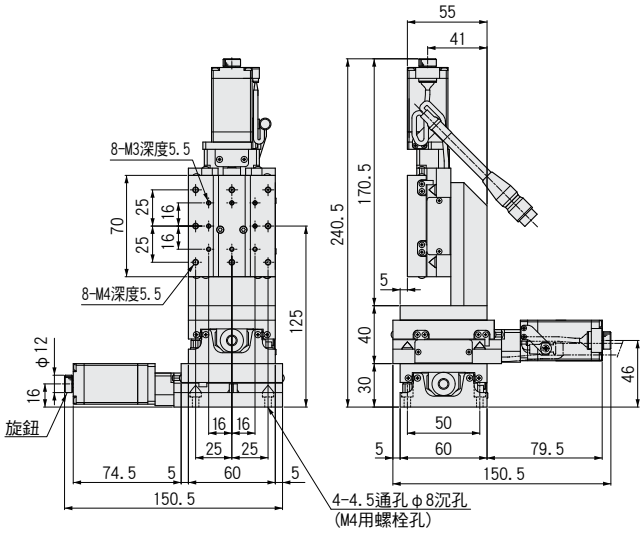

KWG06020-G

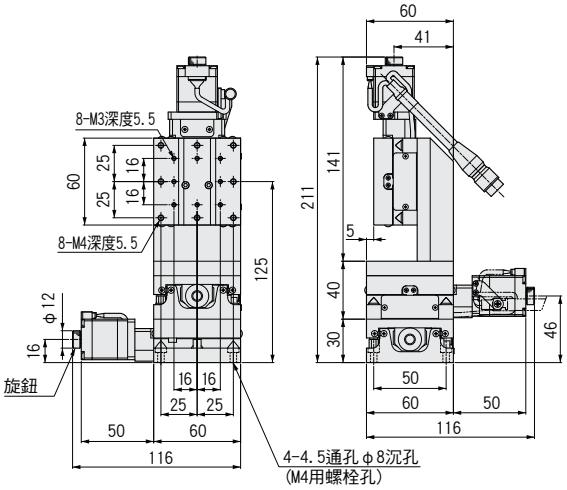

KWG06030-G

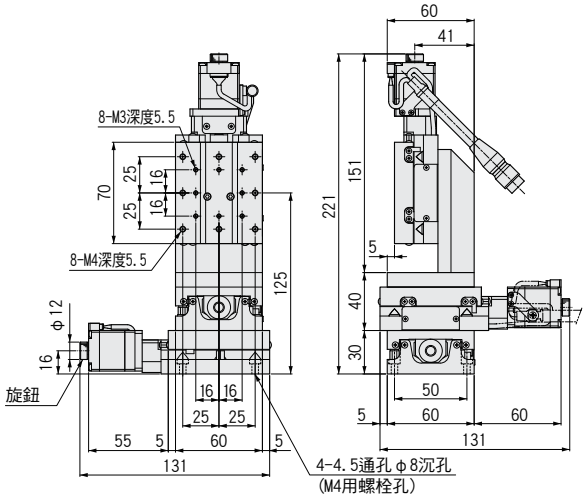

電氣規格：KXG系列

電氣規格

馬達代碼				C	F	G	MA	PA
滑台款型				KXG06020 / KXG06030				
馬達規格（※1）	類型			5相步進馬達　0.75A/相			5相 0.35A/相	α步進馬達
	特長			標準	高扭矩	高分辨率	帶電磁制動	防失步
	款型（※2）			C005C-90215P-1	PK525HPB-C1	PK523HPMB-C1	PKE545MC-A1	ARM24SAK
	制動			無			有	無
	製造商			東方馬達株式會社				
	步進角（位置檢出器）			0.72°	0.72°	0.36°	0.72°	0.36°（1000P/R設定時）
	質量			0.11kg	0.2kg	0.11kg	0.52kg	0.15kg
	馬達尺寸	□尺碼		28mm	28mm	28mm	42mm	28mm
		L尺碼		42mm	61.5mm	42mm	69mm	45mm
	勵磁（瞬間）最大扭矩			0.041N·m	0.073N·m	0.038N·m	0.240N·m	0.055N·m
	驅動器款型			▶P.1-205～			RKSD503M-A	ARD-K
	輸入電源（電壓·頻率）						單相AC100-120V 50/60Hz	DC24V±10%
感應器	極限感應器			有				
	原點感應器			有				
	近接原點感應器			—				
	款型			光電素子 EE-SX4320（歐姆龍株式會社）				
	電源電壓			DC5～24V　±10%				
	消耗電流			合計60mA以下				
	操縱輸出			NPN集電極開路輸出　DC5～24V 8mA以下 殘留電壓0.3V以下（負荷電流2mA時）				
	輸出理論			檢出（遮光）時 輸出電晶體OFF（非導通）				
聯接頭	馬達	款型		HR10A-10J-12P（73）（廣瀨電機株式會社）			馬達側:5557-06R-210(MOLEX) 電磁制動器側:5557-02R-210(MOLEX)	43025-1000（MOLEX）
		接收側款型		HR10A-10P-12S（73）（廣瀨電機株式會社）			馬達側:5559-06P-210(MOLEX) 電磁制動器側:5559-02P-210(MOLEX)	43020-1000（MOLEX）
	感應器	款型		HR10A-10J-12P（73）（廣瀨電機株式會社）※與馬達共通			HR10A-7J-6P（73）（廣瀨電機株式會社）	
		接收側款型		HR10A-10P-12S（73）（廣瀨電機株式會社）※與馬達共通			HR10A-7P-6S（73）（廣瀨電機株式會社）	
精度規格	分辨率	導程1mm	Full/Half	2μm/1μm	2μm/1μm	1μm/0.5μm	2μm/1μm	1μm（1000P/R設定時）
			微步進（1/20分割時）	0.1μm	0.1μm	0.05μm	0.1μm	—
	MAX速度		導程1mm	20mm/sec	30mm/sec	20mm/sec	25mm/sec	30mm/sec

※1　馬達單體性能詳情見▶P.1-213～　　※2　款型為駿河精機獨創管理型式　　※XY, Z, XYZ 電氣規格相同。

外形尺碼圖

●KXG系列

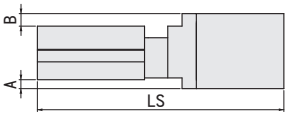

馬達代碼	尺寸□[mm]	A	B	LS 20	LS 30
C	28	—	0	116	131
F	28	—	0	136	151
G	28	—	0	116	131
MA	42	5	7	164	179
PA	28	—	0	129	144

注意：馬達代碼MA為馬達·聯接頭突出上面、底面、側面。

針排列・結線圖

馬達代碼		KXG系列

C・F・G 馬達・感應器共通

【針排列(通用)】

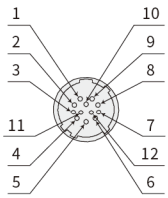

【接線圖(通用)】

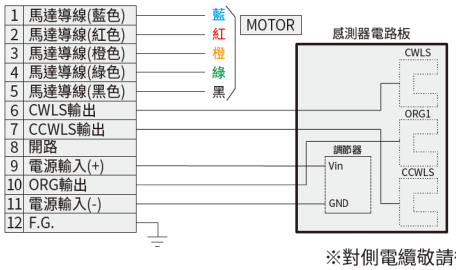

※對側電纜敬請從各產品的附屬電纜選項代碼中選擇。 詳情見▶ P.1-207、209～

MA 馬達

馬達電纜（3m）

・驅動器側

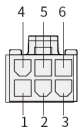

5557-06R-210
(MOLEX)

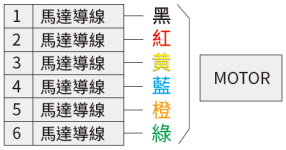

・馬達側

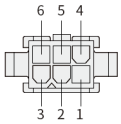

5559-06P-210
(MOLEX)

・電纜電磁制動器（3m）

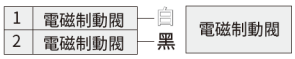

5559-02P-210
(MOLEX)

※馬達電纜款型：CC030VPFB 詳情見▶ P.1-211

MA 感應器

【針排列(感應器)】

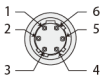

【接線圖(感應器)】

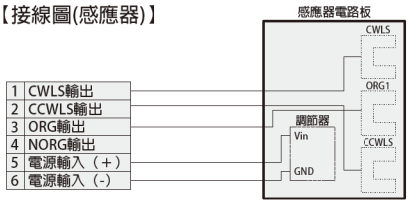

※對側電纜款型：HR10AP-S-AB-6-2 詳情見▶ P.1-212

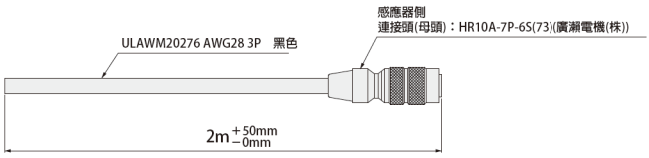

Pin	信號名
1	CWLS
2	CCWLS
3	ORG
4	NORG
5	V+
6	V-

※遮罩與連接器內殼連接。

PA 馬達

馬達電纜（3m）

・驅動器側

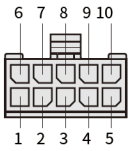

43025-1000（MOLEX）

・馬達側

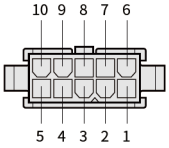

43020-1000（MOLEX）

※馬達電纜款型：CC030VA2R2 詳情見▶ P.1-211

PA 感應器

【針排列(感應器)】

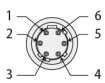

【接線圖(感應器)】

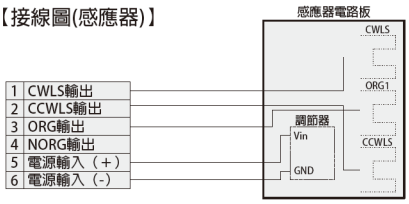

※對側電纜款型：HR10AP-S-SB-6-2 詳情見▶ P.1-212

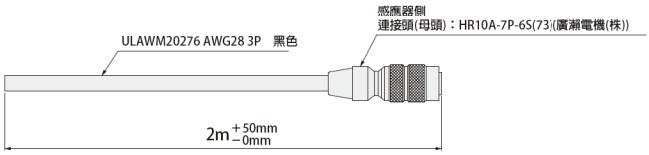

Pin	信號名
1	CWLS
2	CCWLS
3	ORG
4	NORG
5	V+
6	V-

※遮罩與連接器內殼連接。

電氣規格:KXG06020/KXG06030

時序圖

KXG06020

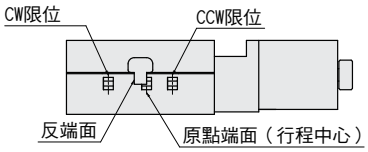

KXG06030

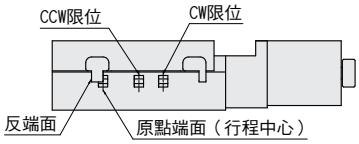

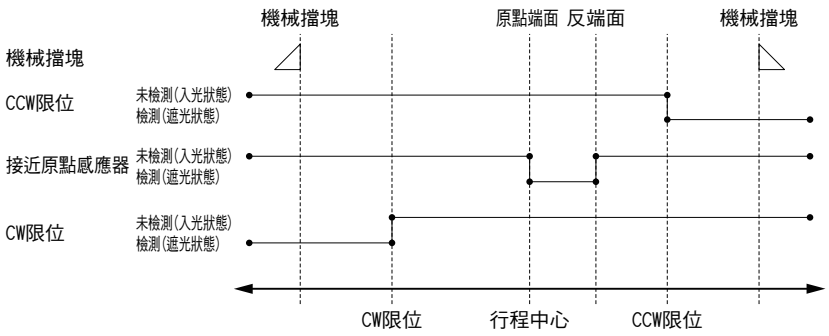

單位[mm]　　CW方向 ◀——▶ CCW方向

	坐標基準	機械極限	CW極限	原點端面 行程中心	反端面	CCW極限	機械極限
KXG06020	原點回歸	11	10.5	0	5	10.5	13
KXG06030	原點回歸	16	15.5	0	5	15.5	18

※原點回歸為使用DS102/DS112系列控制器進行原點回歸類型4時
※坐標為設計上的數值。 實際可能發生±0.5mm左右尺碼誤差。

注意：時序圖顯示感應器的時序，並非顯示輸出信號理論。
關於輸出信號理論敬請參照電氣規格—感應器—輸出理論中記載的輸出電晶體ON/OFF顯示。

原點回歸方法

我社的自動滑台根據款型感應器的規格有所不同。 因此，原點回歸方法亦分為多種類型，需要根據使用的滑台款型正確選擇回歸類型。 如選擇了錯誤的類型，可能導致回歸動作不正確或無法回歸原點。 敬請遵循以下「推薦原點回歸方法」，選擇適合您使用的滑台款型的原點回歸類型。

■KXG06020/KXG06030 推薦原點回歸方法　原點回歸隊列 ▶P.1-201～

類型 3：對CCW方向進行檢出，對ORG信號的CCW側邊緣進行檢出工程。
類型 4：對CW方向進行檢出，對ORG信號的CW側邊緣進行檢出工程。
類型 9：類型3執行後，對TIMING信號的CCW側邊緣進行檢出工程。
類型 10：類型4執行後，對TIMING信號的CW側邊緣進行檢出工程。

【類型3】

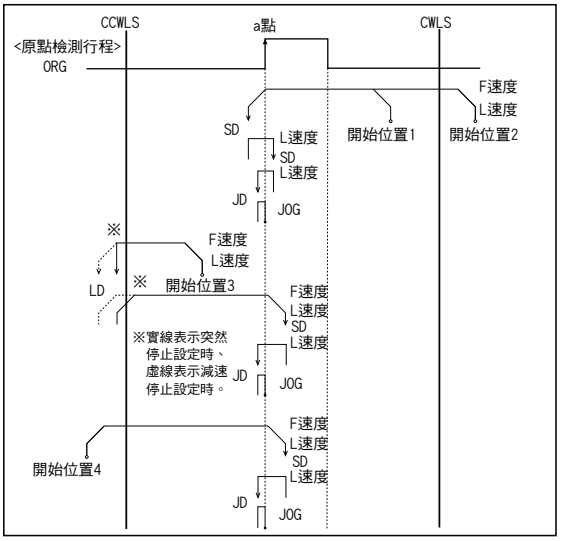

【類型4】

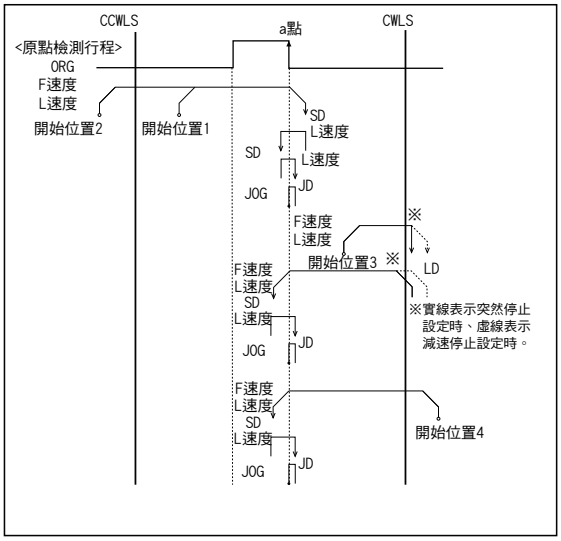

適應驅動器

■ 驅動器 ▶P.1-205～

DC24V系輸入

款型	CRD5107P	SD5107P3-A22
分割數	1～1/250(16階段)	Full/Half

AC100V系輸入

款型	RKD507-A
分割數	1～1/250(16階段)

適應步進馬達控制器

■ 控制器 ▶P.1-197～

輸入電源	泛用輸入輸出埠	驅動器型	
		Full/Half	1～1/250(16階段)
AC100-240V	無	DS102NR	DS102MS
	有	DS102NR-IO	DS102MS-IO
DC24V	無	DS112NR	DS112MS
	有	DS112NR-IO	DS112MS-IO

■連接示例

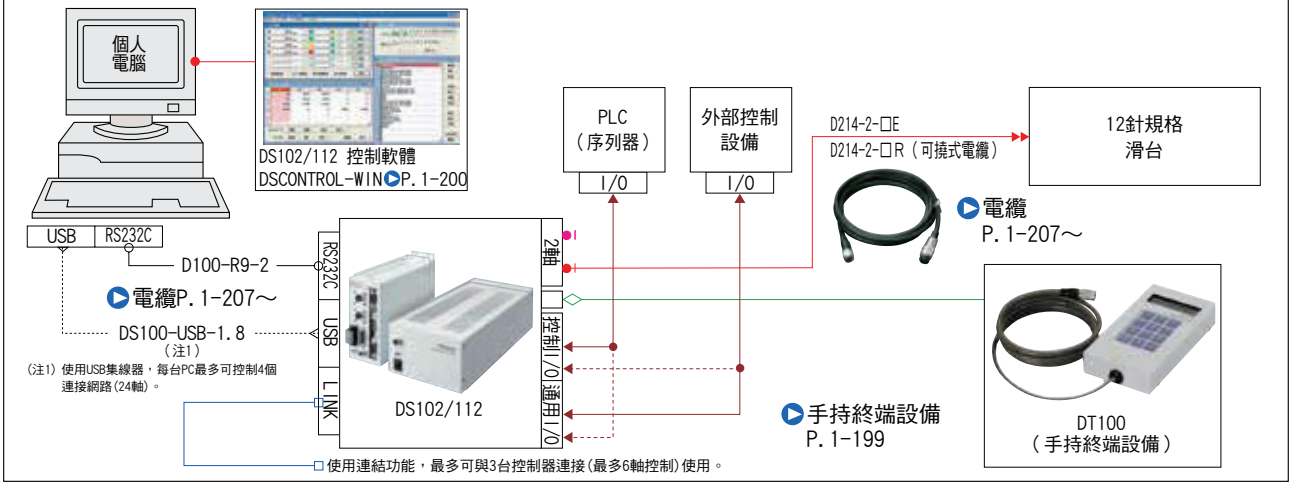

KGW series

SURUGA SEIKI

測角滑台□40：KGW04/KAW04

■1軸
KGW04040（KGW04系列）

■2軸
KAW04040（KAW04系列）

對應無馬達
※KGW以外
詳情見▶P.009

RoHS

■這是在移動導軌上採用交叉滾子、在結構上採用蝸桿傳動的高精度測角滑台。

■關於2軸的組合構成
旋轉中心不同的單軸滑台組合。
與配置中標記在旁邊的滑台組合、構成相同的旋轉中心。

款型　選擇代碼　可選代碼

K GW04040- □ □

1　2　3　4　5

▶電纜　P.1-207～
▶電氣規格見P.1-151～

1 軸

G	1軸
A	2軸

2 滑台面尺寸

04	□40mm

3 旋轉中心高度（W.D）

040	40mm
060	60mm

※2軸［A］為僅040

4 感應器遮蓋位置規格

代碼	規格
L	L位置
R	左右相反

5 附屬電纜選項

代碼	規格	電纜款型
A	2m	D214-2-2E
B	2m單側散線	D214-2-2EK
C	4m	D214-2-4E
D	4m單側散線	D214-2-4EK
E	僅聯接頭（無電纜）	—
F	可撓式電纜2m	D214-2-2R
G	可撓式電纜2m單側散線	D214-2-2RK
H	可撓式電纜4m	D214-2-4R
J	可撓式電纜4m單側散線	D214-2-4RK
無記號	無電纜（標準）	—

※單側散線為反滑台側。
※見▶P.1-207, 209～更詳細的信息，電纜。
※請選擇"代碼A，C，F或H"
時步進電機控制器連接(DS102/112)

選擇例

客戶需要規格	軸數	＋	旋轉中心高度(W.D)	＋	感應器遮蓋位置	＋	附屬電纜	▷ KGW04060-L
	1軸		60mm		L位置		無電纜	

配置

軸數			1軸		2軸
款型			KGW04040-L	KGW04060-L	KAW04040-L
（左右相反）			KGW04040-R	KGW04060-R	KAW04040-R
機械規格	移動量　上軸/下軸		±8°	±6°	±8°/±6°
	滑台面尺寸		40×40mm		
	移動結構		蝸桿傳動（1/240）		
	導軌		交叉滾子導軌		
	主材質－表面處理		鋁－黑耐酸鋁處理、磷青銅－黑塗裝		
	自重		0.4kg		0.8kg
尺碼公差	滑台高度		20±0.2mm		40±0.4mm
	旋轉中心高度		40±0.2mm	60±0.2mm	40±0.4mm
	旋轉中心振動精度		0.01mm以內		—
精度規格	分辨率/脈衝		0.003°（Full）		
	MAX速度	上側	15°/sec［5kHz］		
		下側			
	反復定位精度		±0.005°以內		
	耐荷重		3kgf【29.4N】		2.5kgf【24.5N】
	力矩剛性		仰俯1.30/橫擺1.16/側傾0.27［"/N·cm］		仰俯1.57/橫擺2.32/側傾1.57［"/N·cm］
	空轉		0.01°以內		
感應器	極限感應器		有		
	原點感應器		有		
	狹縫原點感應器		—		
附屬螺絲（六角帶孔螺釘）			M3－6　4個		

SURUGA SEIKI CAD數據 3D・2D

外形尺碼圖〔1軸〕

KGW04-L系列

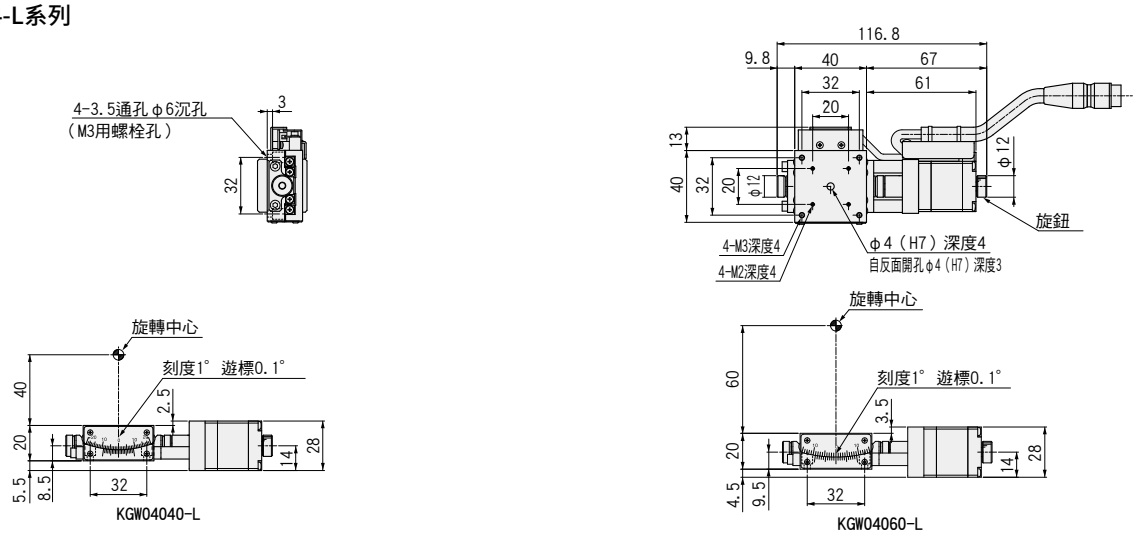

KGW04-R系列

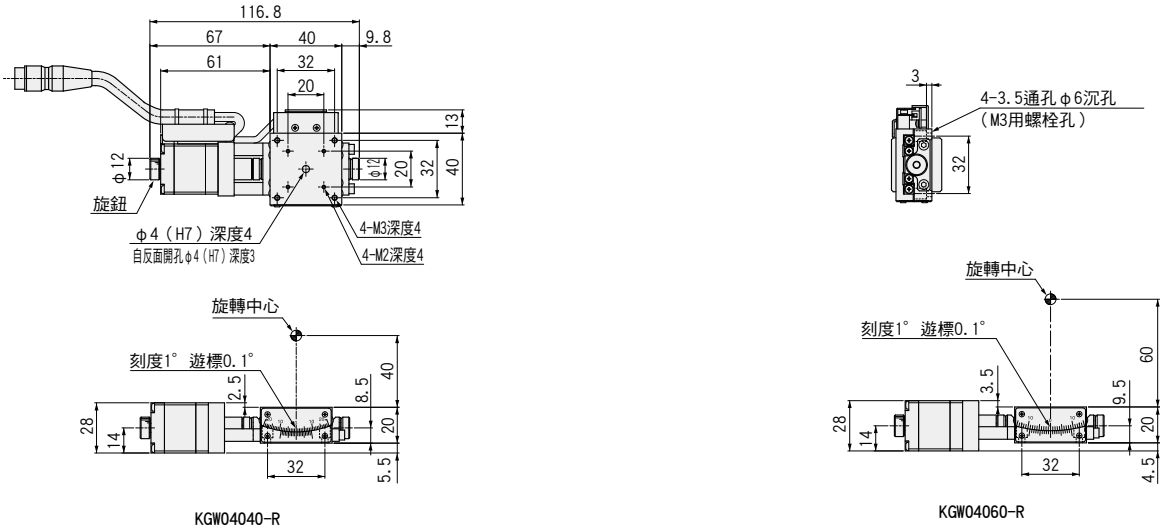

外形尺碼圖〔2軸〕

KAW04040-L

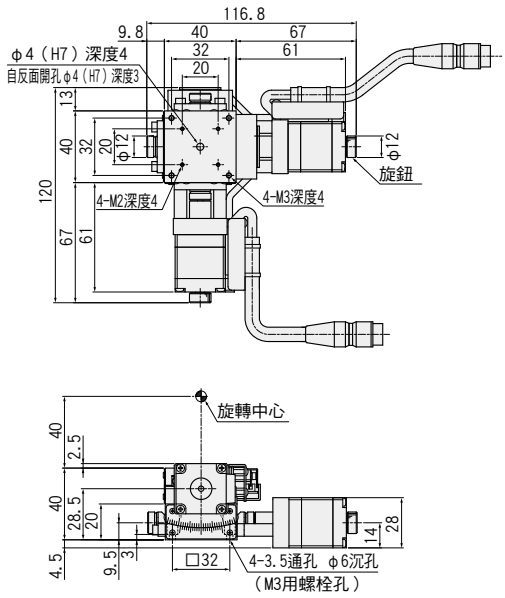

KAW04040-R

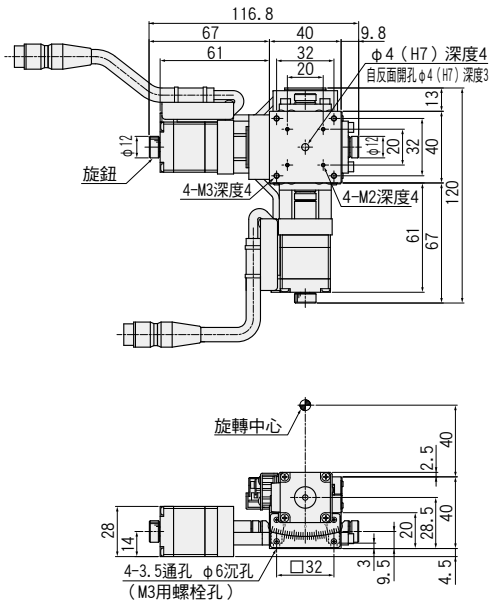

電氣規格：KGW04/KAW04

電氣規格

款型		KGW04040-L	KGW04060-L
左右相反		KGW04040-R	KGW04060-R
馬達(※1)	類型	5相步進馬達　0.75A/相(東方馬達株式會社)	
	款型(※2)	C005C-90215P-1	
	步進角	0.72°	
聯接頭	款型	HR10A-10J-12P(73)(廣瀨電機株式會社)	
	接受側適合聯接頭	HR10A-10P-12S(73)(廣瀨電機株式會社)	
感應器	極限感應器	有	
	原點感應器	有	
	狹縫原點感應器	—	
	款型	光電素子　EE-SX4320(歐姆龍株式會社)	
	電源電壓	DC5～24V　±10%	
	消耗電流	合計60mA以下	
	操縱輸出	NPN集電極開路輸出　DC5～24V 8mA以下 殘留電壓0.3V以下(負荷電流2mA時)	
	輸出理論	檢出(遮光)時：輸出電晶體OFF(非導通)	

※1　馬達單體性能詳情見P.1-213～
※2　款型為駿河精機獨創管理型式

已對應感應器DC5V～24V對應

此滑台搭載DC5V～24V對應感應器。 不需要24V對應感應器放大器基板K-PCBA24。

不使用我社控制器，需要使用運動控制板及可編程邏輯控制器(PLC)令過去產品動作時，以往無法直接接續操縱機器，需要K-PCBA24。

敬請注意

對於使用過去的KS501-40，-60與感應器放大器基板(K-PCBA24)的客戶，將滑台置換為KGW04，06時，需要不使用感應器放大器基板而進行配線。
為活用使用感應器放大器基板的既存電纜，我們為您提供跳轉感應器放大器基板的輸入輸出聯接頭間線束。詳情敬請咨詢。

針排列

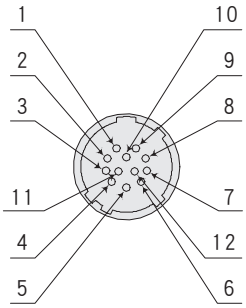

結線圖

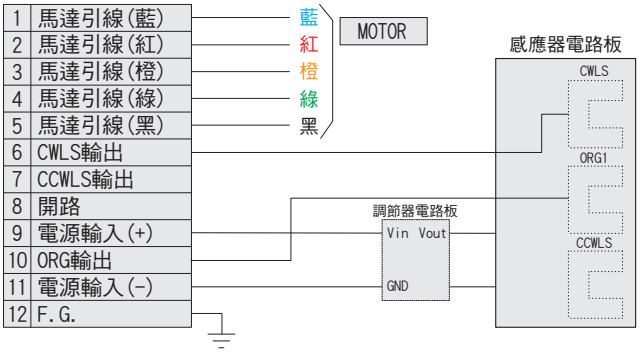

時序圖

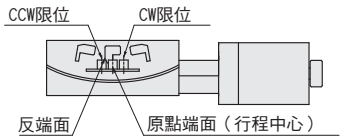

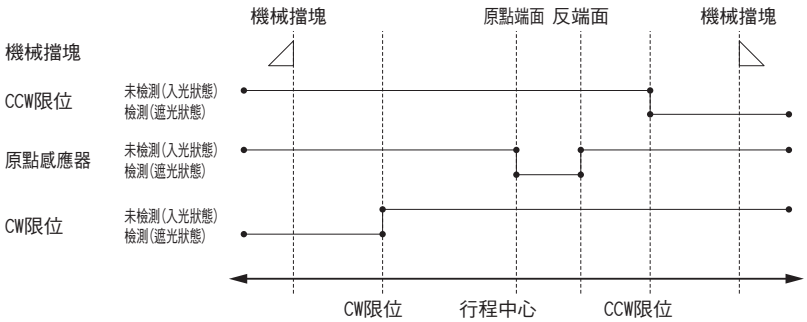

單位[deg.]　CW方向 ◀——▶ CCW方向

	坐標基準	CW極限	原點端面 行程中心	反端面	CCW極限
KGW04040	原點回歸	8.5	0	2.5	8.5
KGW04060	原點回歸	6.5	0	2.1	6.5

※原點回歸為使用DS102/DS112進行原點回歸類型4時。
※坐標為設計上的數值。實際可能發生±0.5deg.左右尺碼誤差。

注意：時序圖顯示感應器的時序，並非顯示輸出信號理論。
關於輸出信號理論敬請參照電氣規格—感應器—輸出理論中記載的輸出電晶體ON/OFF顯示。

原點回歸方法

我社的自動滑台根據款型感應器的規格有所不同。 因此，以推薦以外的原點回歸方法可能無法正常動作。
接續我社控制器時， 敬請設定為推薦原點回歸方法使用。

■KGW04/KAW04 推薦原點回歸方法　　原點回歸隊列 ▶P.1-201～

類型 3：對CCW方向進行檢出，對ORG信號的CCW側邊緣進行檢出工程。
類型 4：對CW方向進行檢出，對ORG信號的CW側邊緣進行檢出工程。
類型 9：類型3執行後，對TIMING信號的CCW側邊緣進行檢出工程。
類型10：類型4執行後，對TIMING信號的CW側邊緣進行檢出工程。

【類型3】向CCW方向進行檢測，執行ORG信號的CCW側緣(a點)的檢測工序。

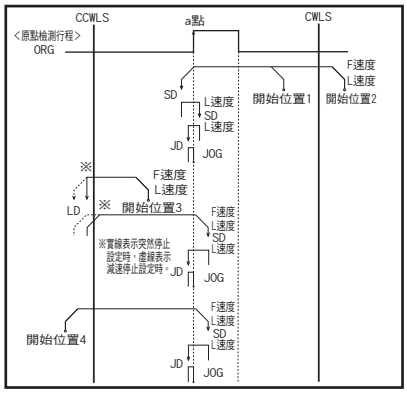

【類型4】向CW方向進行檢測，執行ORG信號的CW側緣(a點)的檢測工序。

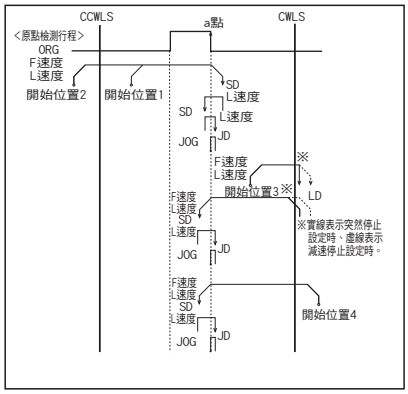

適應驅動器

■ 驅動器 ▶P.1-205～

DC24V系輸入

款型	CRD5107P	SD5107P3-A22
分割數	1～1/250(16階段)	Full/Half

AC100V系輸入

款型	RKD507-A
分割數	1～1/250(16階段)

適應步進馬達控制器

■ 控制器 ▶P.1-197～

輸入電源	泛用輸入輸出埠	驅動器型	
		Full/Half	1～1/250(16階段)
AC100-240V	無	DS102NR	DS102MS
	有	DS102NR-IO	DS102MS-IO
DC24V	無	DS112NR	DS112MS
	有	DS112NR-IO	DS112MS-IO

■連接示例

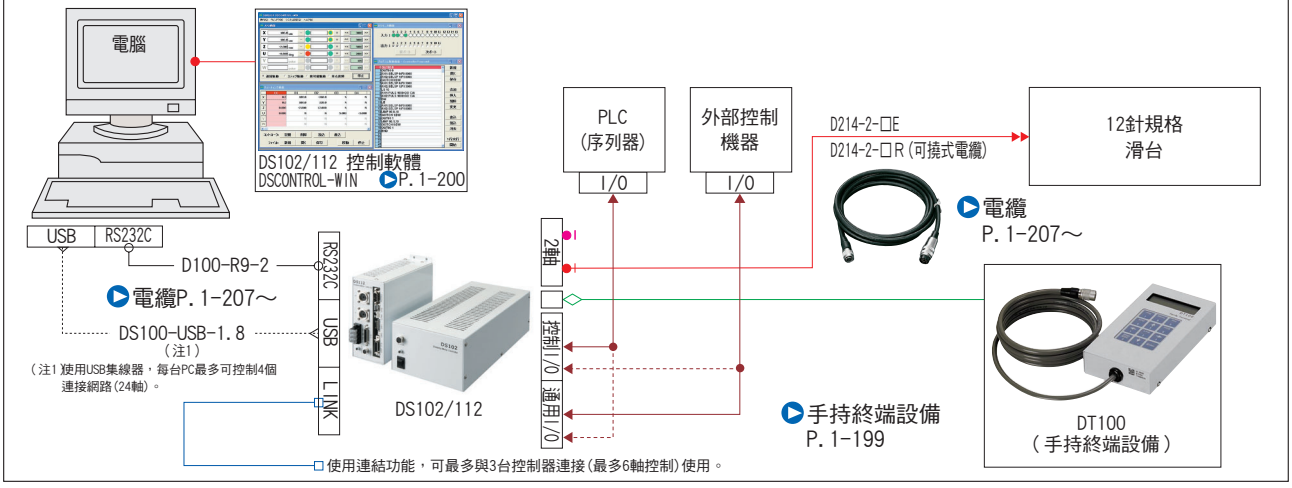

測角滑台□60：KGW06（1軸）

■1軸
KGW06050(KGW06系列)

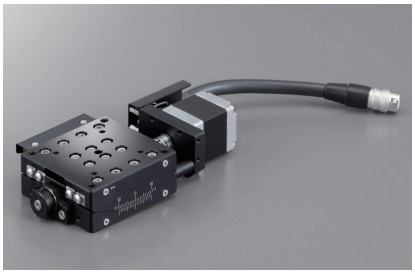

對應無馬達
詳情見▶P.009

RoHS

■在移動導軌上採用交叉滾子、在結構上採用蝸桿傳動的高精度測角滑台。

款型 選擇代碼 可選代碼

KGW 06050-□□

1 2 3 4

▶電纜 P.1-207～
▶電氣規格見P.1-161～

1 滑台面尺寸

06	□60mm

2 旋轉中心高度(W.D)

050	50mm
075	75mm
100	100mm
125	125mm

3 感應器遮蓋位置規格

代碼	規格
L	L位置
R	左右相反

4 附屬電纜選項

代碼	規格	電纜款型
A	2m	D214-2-2E
B	2m單側散線	D214-2-2EK
C	4m	D214-2-4E
D	4m單側散線	D214-2-4EK
E	僅聯接頭（無電纜）	—
F	可撓式電纜2m	D214-2-2R
G	可撓式電纜2m單側散線	D214-2-2RK
H	可撓式電纜4m	D214-2-4R
J	可撓式電纜4m單側散線	D214-2-4RK
無記號	無電纜（標準）	—

※單側散線為反滑台側。
※見▶P.1-207, 209～更詳細的信息，電纜。
※請選擇“代碼A，C，F或H”
時步進電機控制器連接(DS102/112)

選擇例

客戶需要規格	軸數	+	旋轉中心高度(W.D)	+	感應器遮蓋位置	+	附屬電纜	▷ KGW06050-RH
	1軸		50mm		左右相反		可撓式電纜4m	

配置

軸數		1軸			
款型		KGW06050-L	KGW06075-L	KGW06100-L	KGW06125-L
(左右相反)		KGW06050-R	KGW06075-R	KGW06100-R	KGW06125-R
機械規格	移動量	±10°	±8°	±6°	±5°
	滑台面尺寸	60×60mm			
	移動結構(減速比)	蝸桿傳動(1/160)	蝸桿傳動(1/225)	蝸桿傳動(1/292)	蝸桿傳動(1/360)
	導軌	交叉滾子導軌			
	主材質－表面處理	鋁－黑耐酸鋁處理			
	自重	0.5kg			
尺碼公差	滑台高度	25±0.2mm			
	旋轉中心高度	50±0.2mm	75±0.2mm	100±0.2mm	125±0.2mm
	旋轉中心振動精度	0.01mm以內			
精度規格	分辨率/脈衝	0.0045°(Full)	0.0032°(Full)	0.002466°(Full)	0.002°(Full)
	MAX速度	22.5°/sec(5kHz)	16°/sec(5kHz)	12.5°/sec(5kHz)	10°/sec(5kHz)
	反復定位精度	±0.003°以內			
	耐荷重	5kgf【49N】			
	力矩剛性	仰俯0.30/橫擺0.10/側傾0.11(″/N・cm)			
	空轉	0.01°以內			
感應器	極限感應器	有			
	原點感應器	有			
	狹縫原點感應器	—			
附屬螺絲(六角帶孔螺釘)		M4－10 4個			

外形尺碼圖〔1軸〕

SURUGA SEIKI CAD數據 3D・2D

KGW06-L系列

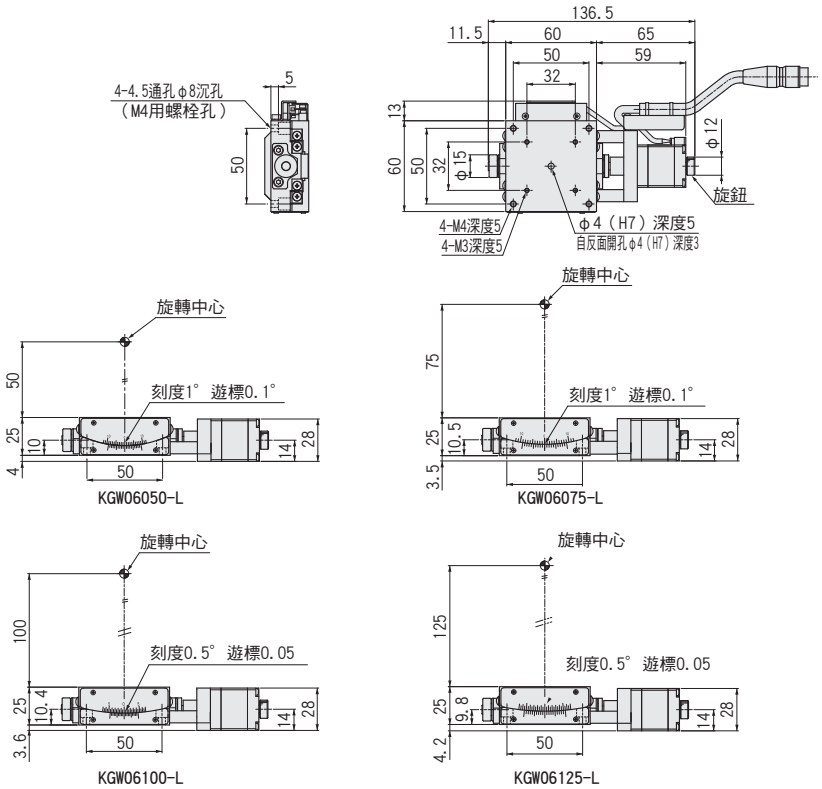

KGW06-R系列(左右相反)

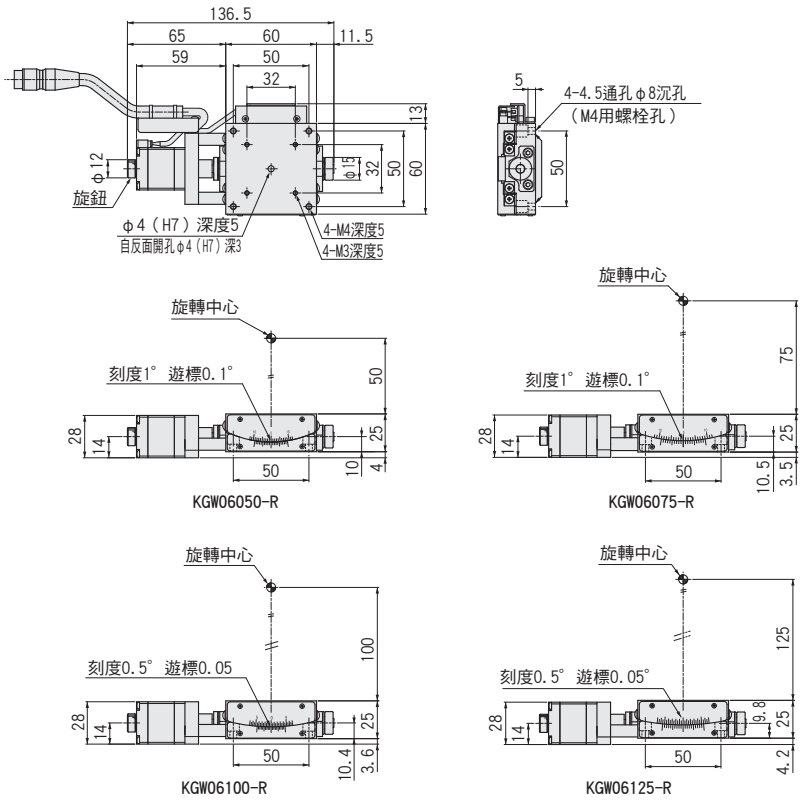

測角滑台□60：KAW06（2軸）

■2軸
KAW06075（KAW06系列）

RoHS

■這是在移動導軌上採用交叉滾子、在結構上採用蝸桿傳動的高精度轉動滑台。

■關於2軸的組合構成
旋轉中心不同的單軸滑台組合。
與配置中標記在旁邊的滑台組合、構成相同的旋轉中心。

款型 選擇代碼 可選代碼

KAW 06050-□□
1 2 3 4

▶電纜 P.1-207～
▶電氣規格見P.1-161～

1 滑台面尺寸

06	□60mm

2 旋轉中心高度（W.D）

050	50mm
075	75mm
100	100mm

3 感應器遮蓋位置規格

代碼	規格
L	L位置
R	左右相反

4 附屬電纜選項

代碼	規格	電纜款型
A	2m	D214-2-2E
B	2m單側散線	D214-2-2EK
C	4m	D214-2-4E
D	4m單側散線	D214-2-4EK
E	僅聯接頭（無電纜）	—
F	可撓式電纜2m	D214-2-2R
G	可撓式電纜2m單側散線	D214-2-2RK
H	可撓式電纜4m	D214-2-4R
J	可撓式電纜4m單側散線	D214-2-4RK
無記號	無電纜（標準）	—

※單側散線為反滑台側。
※見▶P.1-207, 209～更詳細的信息，電纜。
※請選擇“代碼A，C，F或H”
時步進電機控制器連接(DS102/112)

選擇例

客戶需要規格	軸數	+	旋轉中心高度（W.D）	+	感應器遮蓋位置	+	附屬電纜	▷ KAW06100-LB
	2軸		100mm		L位置		2m單側散線	

配置

軸數			2軸		
款型			KAW06050-L	KAW06075-L	KAW06100-L
（左右相反）			KAW06050-R	KAW06075-R	KAW06100-R
機械規格	移動量　上軸/下軸		±10°/±8°	±8°/±6°	±6°/±5°
	滑台面尺寸		60×60mm		
	移動結構（減速比）	上側	蝸桿傳動（1/160）	蝸桿傳動（1/225）	蝸桿傳動（1/292）
		下側	蝸桿傳動（1/225）	蝸桿傳動（1/292）	蝸桿傳動（1/360）
	導軌		交叉滾子導軌		
	主材質一表面處理		鋁-黑耐酸鋁處理		
	自重		1.0kg		
尺碼公差	滑台高度		50±0.4mm		
	旋轉中心高度		50±0.4mm	75±0.4mm	100±0.4mm
	旋轉中心振動精度		—		
精度規格	分辨率/脈衝	Full時 上側	0.0045°	0.0032°	0.002466°
		Full時 下側	0.0032°	0.002466°	0.002°
	MAX速度	上側	22.5°/sec［5kHz］	16°/sec［5kHz］	12.5°/sec［5kHz］
		下側	16°/sec［5kHz］	12.5°/sec［5kHz］	10°/sec［5kHz］
	反復定位精度		±0.003°以內		
	耐荷重		4.5kgf【44.1N】		
	力矩剛性		仰俯0.41/橫擺0.2/側傾0.41［°/N·cm］		
	空轉		0.01°以內		
感應器	極限感應器		有		
	原點感應器		有		
	狹縫原點感應器		—		
附屬螺絲（六角帶孔螺釘）			M4－10　4個		

外形尺碼圖〔2軸〕

SURUGA SEIKI CAD數據 3D・2D

KAW06-L系列

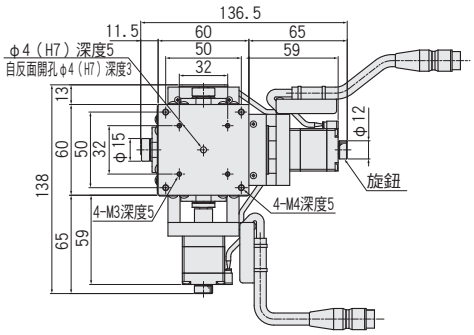

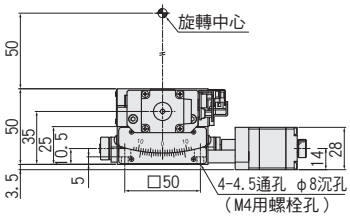

KAW06050-L

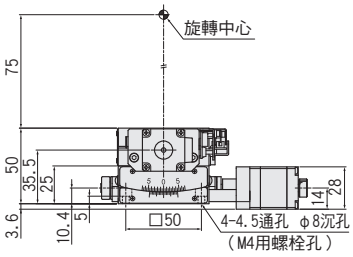

KAW06075-L

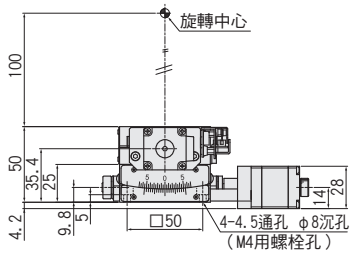

KAW06100-L

KAW06-R系列（左右相反）

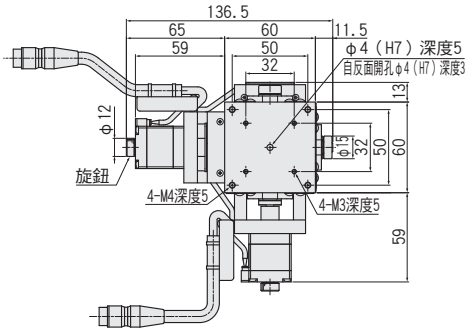

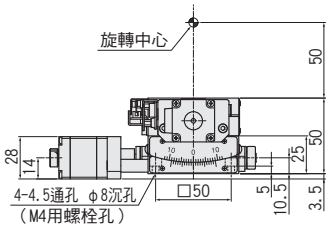

KAW06050-R

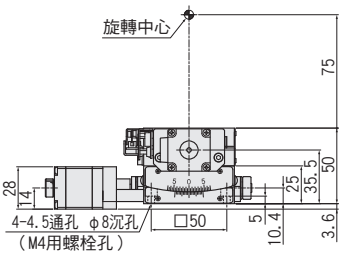

KAW06075-R

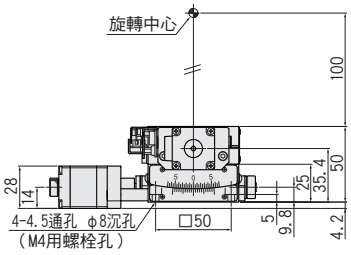

KAW06100-R

電氣規格:KGW06/KAW06

電氣規格

款型		KGW06050-L	KGW06075-L	KGW06100-L	KGW06125-L
左右相反		KGW06050-R	KGW06075-R	KGW06100-R	KGW06125-R
馬達(※1)	類型	5相步進馬達　0.75A/相(東方馬達株式會社)			
	款型(※2)	C005C-90215P-1			
	步進角	0.72°			
聯接頭	款型	HR10A-10J-12P(73)(廣瀨電機株式會社)			
	接受側適合聯接頭	HR10A-10P-12S(73)(廣瀨電機株式會社)			
感應器	極限感應器	有			
	原點感應器	有			
	狹縫原點感應器	-			
	款型	光電素子　EE-SX4320(歐姆龍株式會社)			
	電源電壓	DC5～24V　±10%			
	消耗電流	合計60mA以下			
	操縱輸出	NPN集電極開路輸出　DC5～24V 8mA以下 殘留電壓0.3V以下(負荷電流2mA時)			
	輸出理論	檢出(遮光)時：輸出電晶體OFF(非導通)			

※1　馬達單體性能詳情見 P.1-213～
※2　款型為駿河精機獨創管理型式

已對應感應器DC5V～24V對應

此滑台搭載DC5V～24V對應感應器。 不需要24V對應感應器放大器基板K-PCBA24。

不使用我社控制器，需要使用運動控制板及可編程邏輯控制器(PLC)令過去產品動作時，以往無法直接接續操縱機器，需要K-PCBA24。

敬請注意

對於使用過去的KS501-40,-60與感應器放大器基板(K-PCBA24)的客戶，將滑台置換為KGW04,06時，需要不使用感應器放大器基板而進行配線。
為活用使用感應器放大器基板的既存電纜，我們為您提供跳轉感應器放大器基板的輸入輸出聯接頭間線束。 詳情敬請咨詢。

針排列

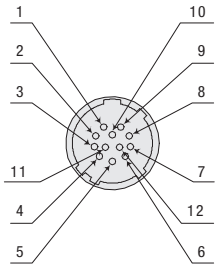

結線圖

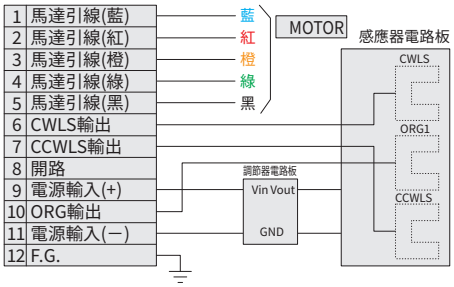

時序圖

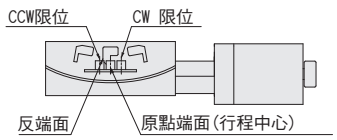

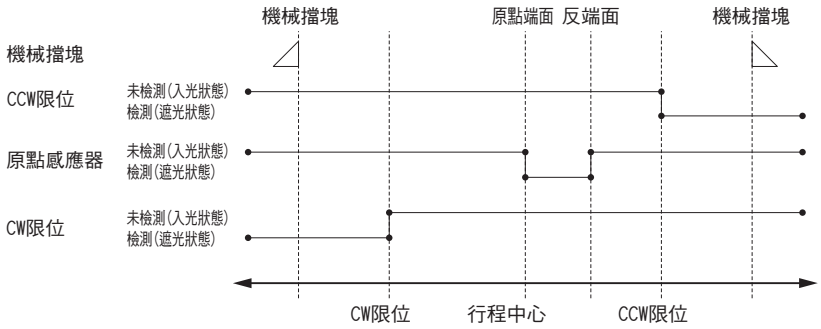

單位[deg.]　CW方向 ◀——▶ CCW方向

	坐標基準	CW極限	原點端面 行程中心	反端面	CCW極限
KGW06050	原點回歸	10.5	0	2.5	10.5
KGW06075	原點回歸	8.3	0	1.8	8.3
KGW06100	原點回歸	6.3	0	1.4	6.3
KGW06125	原點回歸	5.2	0	1.1	5.2

※原點回歸為使用DS102/DS112進行原點回歸類型4時。
※坐標為設計上的數值。 實際可能發生±0.5deg.左右尺碼誤差。

注意：時序圖顯示感應器的時序，並非顯示輸出信號理論。
關於輸出信號理論敬請參照電氣規格—感應器—輸出理論中記載的輸出電晶體ON/OFF顯示。

原點回歸方法

我社的自動滑台根據款型感應器的規格有所不同。 因此，以推薦以外的原點回歸方法可能無法正常動作。 接續我社控制器時，敬請設定為推薦原點回歸方法使用。

■KGW06/KAW06 推薦原點回歸方法　　原點回歸隊列 ▶P.1-201～

類型 3：對CCW方向進行檢出，對ORG信號的CCW側邊緣進行檢出工程。
類型 4：對CW方向進行檢出，對ORG信號的CW側邊緣進行檢出工程。
類型 9：類型3執行後，對TIMING信號的CCW側邊緣進行檢出工程。
類型10：類型4執行後，對TIMING信號的CW側邊緣進行檢出工程。

【類型3】向CCW方向進行檢測，執行ORG信號的CCW側緣(a點)的檢測工序。

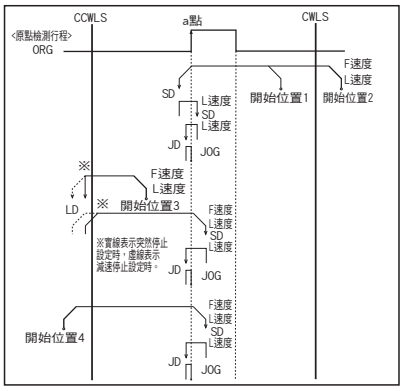

【類型4】向CW方向進行檢測，執行ORG信號的CW側緣(a點)的檢測工序。

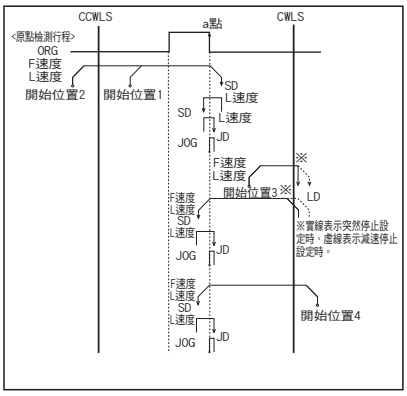

適應驅動器

■ 驅動器 ▶P.1-205～

DC24V系輸入

款型	CRD5107P	SD5107P3-A22
分割數	1～1/250(16階段)	Full/Half

AC100V系輸入

款型	RKD507-A
分割數	1～1/250(16階段)

適應步進馬達控制器

■ 控制器 ▶P.1-197～

輸入電源	泛用輸入輸出埠	驅動器型	
		Full/Half	1～1/250(16階段)
AC100-240V	無	DS102NR	DS102MS
	有	DS102NR-IO	DS102MS-IO
DC24V	無	DS112NR	DS112MS
	有	DS112NR-IO	DS112MS-IO

■連接示例

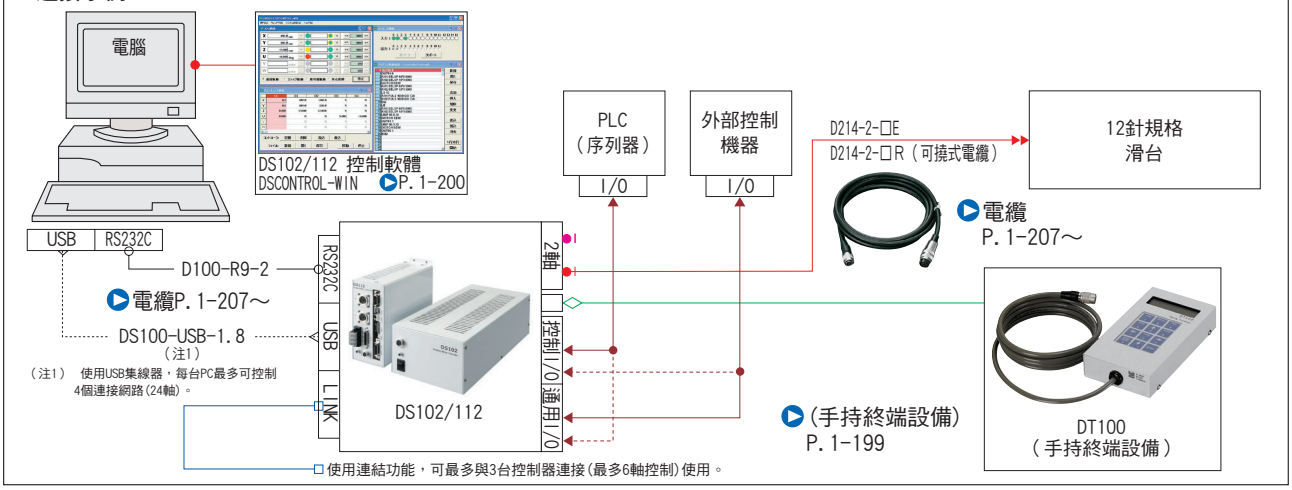

KRW series

SURUGA SEIKI

旋轉滑台φ39/φ59：KRW04/KRW06

KRW04360

KRW06360C

KRW06360C-Z

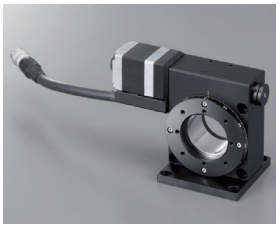

對應無馬達

※Z以外
詳情見▶P.009

RoHS

■最適合想要高精度以廣域角度定位時及360°連續旋轉時的旋轉滑台。
■垂直型適合旋轉電纜處理及偏光元件等。

■安裝偏光稜鏡用適配器，亦可作為自動偏光鏡鏡架使用。
FPW06360C▶P.3-103

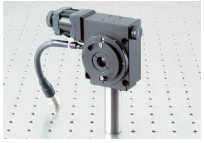

■低價格自動旋轉滑台KRE系列亦加入產品
▶P.1-177～

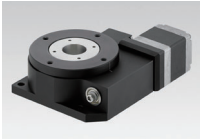

款型　選擇代碼　可選代碼

KRW 04360 - □ □

1　2　3　4

▶電纜　P.1-207～
▶電氣規格見P.1-175～

1 滑台面尺寸

04	φ39mm
06	φ59mm

2 移動量

360	360°

※滑台面的大小06將360°C。

3 安裝

代碼	規格
無記號	水平
Z	垂直

※Z為僅KRW06對應。

4 附屬電纜選項

代碼	規格	電纜款型
A	2m	D214-2-2E
B	2m單側散線	D214-2-2EK
C	4m	D214-2-4E
D	4m單側散線	D214-2-4EK
E	僅聯接頭（無電纜）	—
F	可撓式電纜2m	D214-2-2R
G	可撓式電纜2m單側散線	D214-2-2RK
H	可撓式電纜4m	D214-2-4R
J	可撓式電纜4m單側散線	D214-2-4RK
無記號	無電纜（標準）	—

※單側散線為反滑台側。
※見▶P.1-207, 209～更詳細的信息，電纜。
※請選擇"代碼A，C，F或H"
時步進電機控制器連接(DS102/112)

選擇例

客戶需要規格	滑台面尺寸	+	附屬電纜	▷ KRW06360C-D
	φ59mm		單側散線4m	

配置

款型		KRW04360	KRW06360C	KRW06360C-Z
機械規格	移動量	360°		
	滑台面尺寸	φ39mm	φ59mm	
	移動結構（減速比）	蝸桿（減速比1/120）	蝸桿（減速比1/180）	
	導軌	深溝滾珠軸承		
	主材質—表面處理	鋁—黑耐酸鋁處理		
	自重	0.4kg	0.6kg	0.7kg
精度規格	分辨率/脈衝	0.006°（Full）	0.004°（Full）	
	MAX速度	30°/sec［5kHz］	20°/sec［5kHz］	
	定位精度	0.05°以內		
	反復定位精度	±0.01°以內		
	耐荷重	3.0kgf【29.4N】		1.0kgf【9.8N】
	力矩剛性	0.74″/N·cm	0.2″/N·cm	
	空轉	0.05°以內		
	背隙	0.1°以內	0.05°以內	
	平行度	50μm以內		
	偏芯量	5μm以內		
	面振動量	30μm以內		
感應器	極限感應器	—		
	原點感應器	有		
	近接原點感應器	—		
附屬螺絲（六角帶孔螺釘）		M3-30　3個	M4-30　3個	M4-6　4個

外形尺碼圖

KRW04360

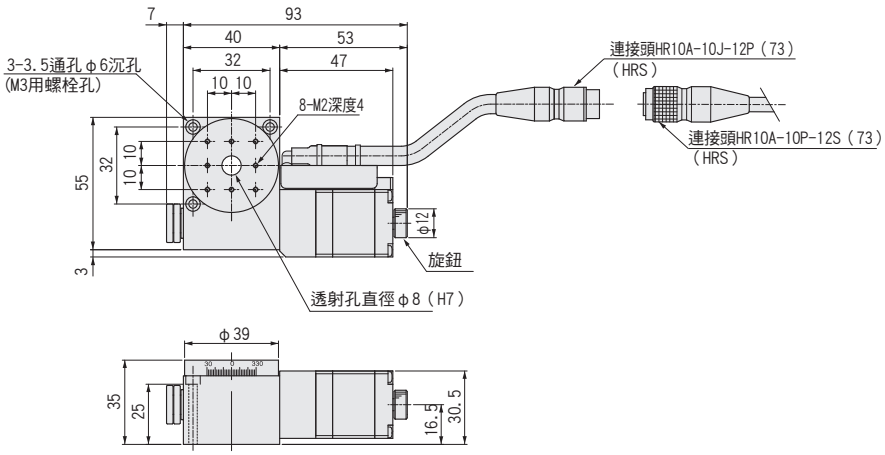

KRW06360C

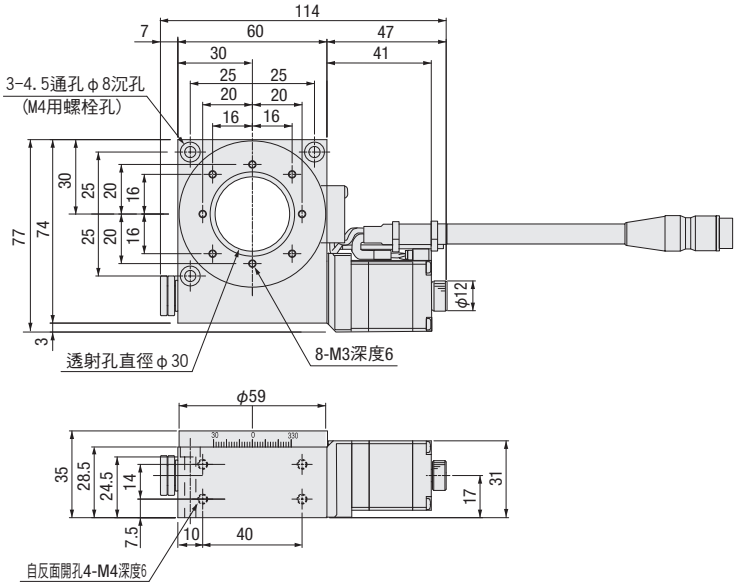

KRW06360C-Z

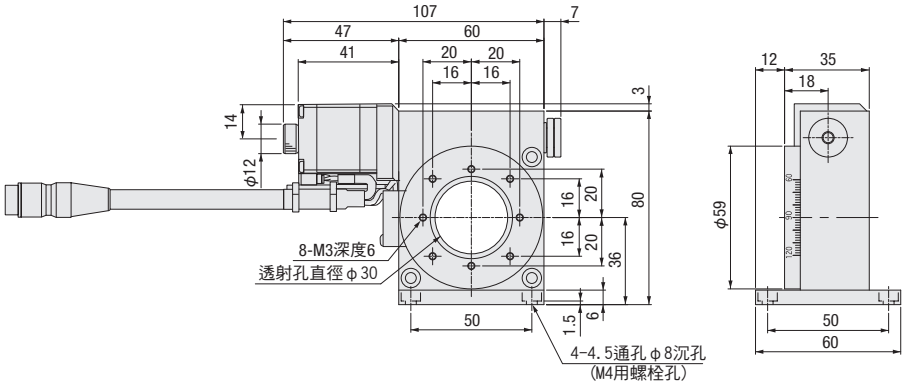

電氣規格:KRW04/KRW06

電氣規格

滑台款型		KRW04360	KRW06360C	KRW06360C-Z
馬達(※1)	類型	5相步進馬達　0.75A/相(東方馬達株式會社)		
	款型(※2)	C005C-90215P-1		
	步進角	0.72°		
聯接頭	款型	HR10A-10J-12P(73)(廣瀨電機株式會社)		
	接受側適合聯接頭	HR10A-10P-12S(73)(廣瀨電機株式會社)		
感應器	極限感應器	-		
	原點感應器	有		
	近接原點感應器	-		
	款型	光電素子　EE-SX4320(歐姆龍株式會社)		
	電源電壓	DC5～24V　±10%		
	消耗電流	合計35mA以下		
	操縱輸出	NPN集電極開路輸出　DC5～24V 8mA以下 殘留電壓0.3V以下(負荷電流2mA時)		
	輸出理論	檢出(遮光)時：輸出電晶體OFF(非導通)		

※1　馬達單體性能詳情見 ▶ P.1-213～
※2　款型為駿河精機獨創管理型式

已對應感應器DC5V～24V對應

此滑台搭載DC5V～24V對應感應器 無需24V對應感應器放大器基板K-PCBA24

不使用我社控制器，需要使用運動控制板及可編程邏輯控制器(PLC)令過去產品動作時，以往無法直接接續操縱機器，需要K-PCBA24。

敬請注意

對於使用過去的KS401-40,-60,KS431-60與感應器放大器基板(K-PCBA24)的客戶，將滑台置換為KRW時，需要不使用感應器放大器基板而進行配線。
為活用使用感應器放大器基板的既存電纜，我們為您提供跳轉感應器放大器基板的輸入輸出聯接頭間線束。 詳情敬請咨詢。

針排列

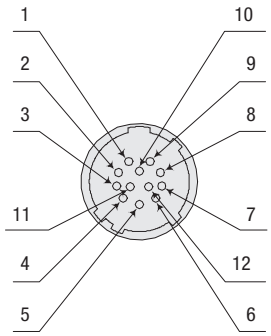

結線圖

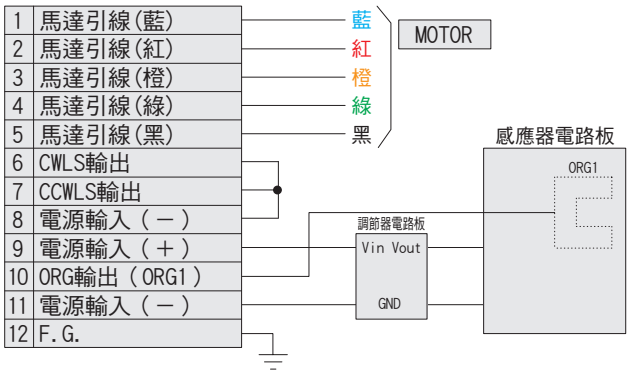

時序圖

KRW04360/KRW06360C
原點…以刻度0[°]檢出(遮光)。
(DS102/DS112系列進行原點回歸4時)

	原點檢出刻度位置[°]
KRW04360	0(原點端面：遮光板的CCW側邊緣) 11(反端面　：遮光板的CW側邊緣)
KRW06360C	0(原點端面：遮光板的CCW側邊緣) 9(反端面　：遮光板的CW側邊緣)

注意：時序圖表上的CW/CCW方向表示馬達旋轉。 關於馬達CW旋轉，上面板為以下旋轉方向。
KRW04360：CW　　KRW06360：CW

原點回歸方法

我社的自動滑台根據款型感應器的規格有所不同。 因此，以推薦以外的原點回歸方法可能無法正常動作。
接續我社控制器時， 敬請設定為推薦原點回歸方法使用。

■KRW04360/KRW06360C 推薦原點回歸方法　　原點回歸隊列 ▶ P.1-201～

類型 3：對CCW方向進行檢出，對ORG信號的CCW側邊緣進行檢出工程。
類型 4：對CW方向進行檢出，對ORG信號的CW側邊緣進行檢出工程。
類型 9：類型3執行後，對TIMING信號的CCW側邊緣進行檢出工程。
類型10：類型4執行後，對TIMING信號的CW側邊緣進行檢出工程。

【類型3】 向CW方向進行檢測，執行ORG信號的CW側緣(a點)的檢測工序。

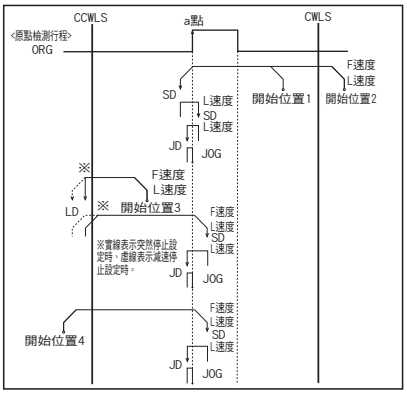

【類型4】 沿CW方向進行檢測，執行ORG信號的CW側緣(a點)的檢測工序。

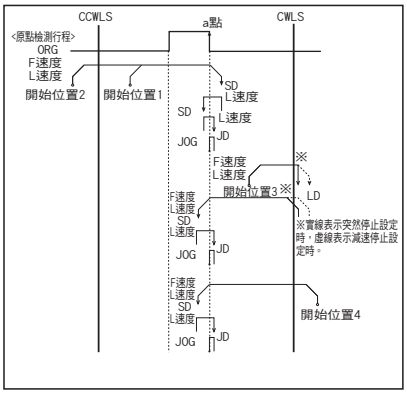

適應驅動器

■ 驅動器 ▶P.1-205～

DC24V系輸入

款型	CRD5107P	SD5107P3-A22
分割數	1～1/250(16階段)	Full/Half

AC100V系輸入

款型	RKD507-A
分割數	1～1/250(16階段)

適應步進馬達控制器

■ 控制器 ▶P.1-197～

輸入電源	泛用輸入輸出埠	驅動器型	
		Full/Half	1～1/250(16階段)
AC100-240V	無	DS102NR	DS102MS
	有	DS102NR-IO	DS102MS-IO
DC24V	無	DS112NR	DS112MS
	有	DS112NR-IO	DS112MS-IO

■連接示例

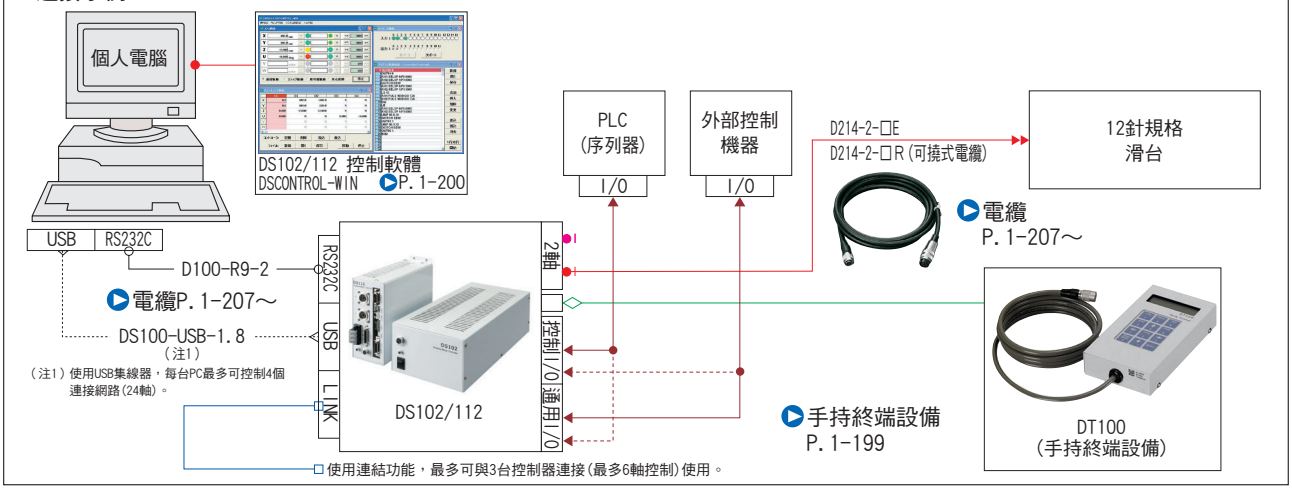

Motorless

SURUGA SEIKI

X-axis Linear Ball Guide：KXG06020V

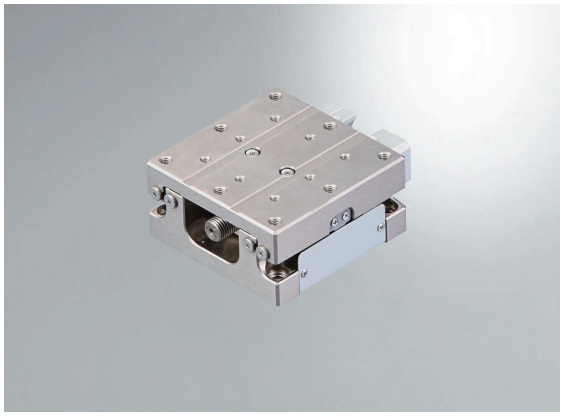

accessories		P28	S38	S40
■Motor bracket (installed on main body)		○		
■Motor Plate		○	-	-
■Coupling (with screws)		○		
■Screws	For Motor	4 of M2.5-10	4 of M3-12	2 of M4-12
	For Motor Plate	4 of M3-6	-	-
	For Main Body	4 of M4-12		
■Sensor cable (2m One end loose)		○(HR10AP-S-SB-6-2)		
■cable tie		○	-	-

Model　　Option code

KXG06020V-P28

1

1 Application Motor

Code	Specification
P28	□28 Steppingmotor
S38	□38 Servo motor
S40	□40 Servo motor

Pin allocation (Sensor)

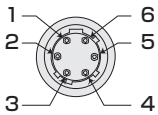

1	CWLS output
2	CCWLS output
3	ORG output(ORG1)
4	N.C.
5	Power input(+)
6	Power input(−)

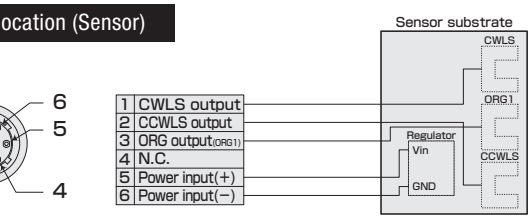

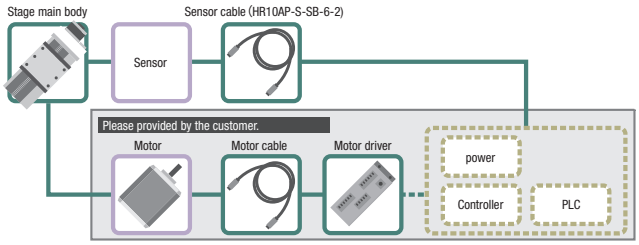

S P E C				
Model		KXG06020V-P28	KXG06020V-S38	KXG06020V-S40
Mechanical specification	Travel length	20mm		
	Table size	60×60mm		
	Feed screw (Ball screw)	φ8 lead 1		
	Guide	Linear ball guide		
	Main materials-Finishing	Stainless-Electroless nickel plating		
Accuracy specification	Resolution (Pulse) Full/Half	2μm/1μm		
	Resolution (Pulse) Microstep	0.1μm (1/20 on resolution)		
	MAX speed	20mm/sec		
	Uni-directional positioning accuracy	5μm		
	Repeatability positioning accuracy	±0.5μm		
	Load capacity	5kgf【49N】		
	Moment stiffness	Pitch 0.08/yaw 0.05/roll 0.05 ["/N・cm]		
	Lost motion	1μm		
	Backlash	1μm		
	Straightness	3μm		
	Parallelism	15μm		
	Motion parallelism	10μm		
	Pitching/Yawing	20"/15"		

SENSOR	
Limit sensor	Installed
Origin sensor	Installed
Slit origin sensor	–
Model	Photo microsensor EE-SX4320 (Omron Co., Ltd.)
Power voltage	DC5～24V　±10%
Consumption current	Total 60mA or less
Control output	NPN open collector output DC5~24V 8mA or less Residual voltage 0.3V or less when the load current is 2mA
Output logic	On detection (light shield condition): Output transistor OFF (Non-continuity)

※SPEC is reference for the standard model

URL:http://eng.surugaseiki.com/ E-mail:e-ost@suruga-g.co.jp
TEL.+81-3-6711-5014 FAX.+81-3-6711-5021

KXG06020V-P28

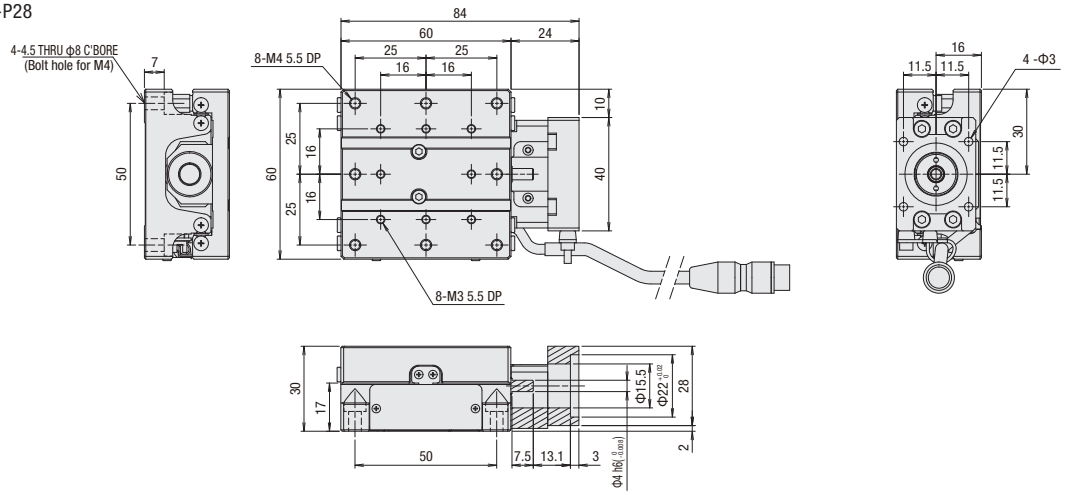

KXG06020V-S38

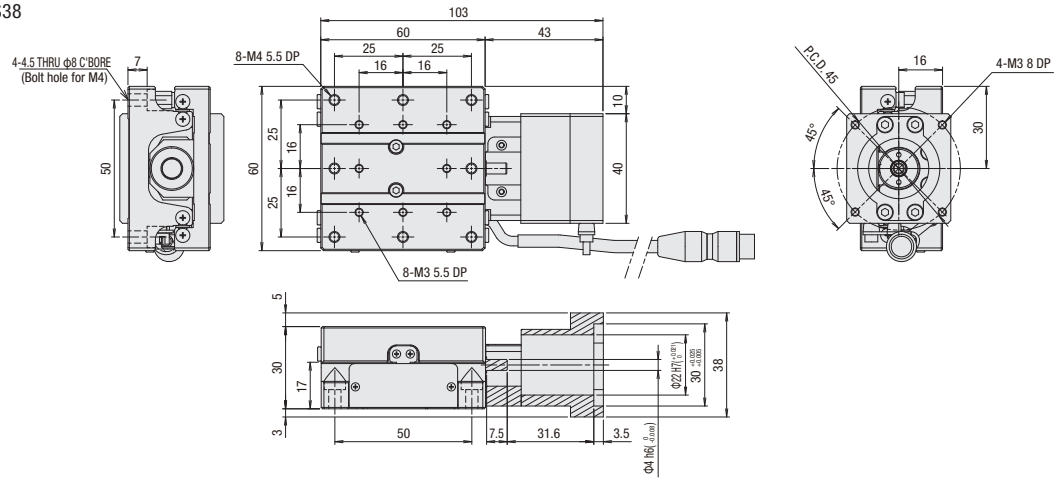

KXG06020V-S40

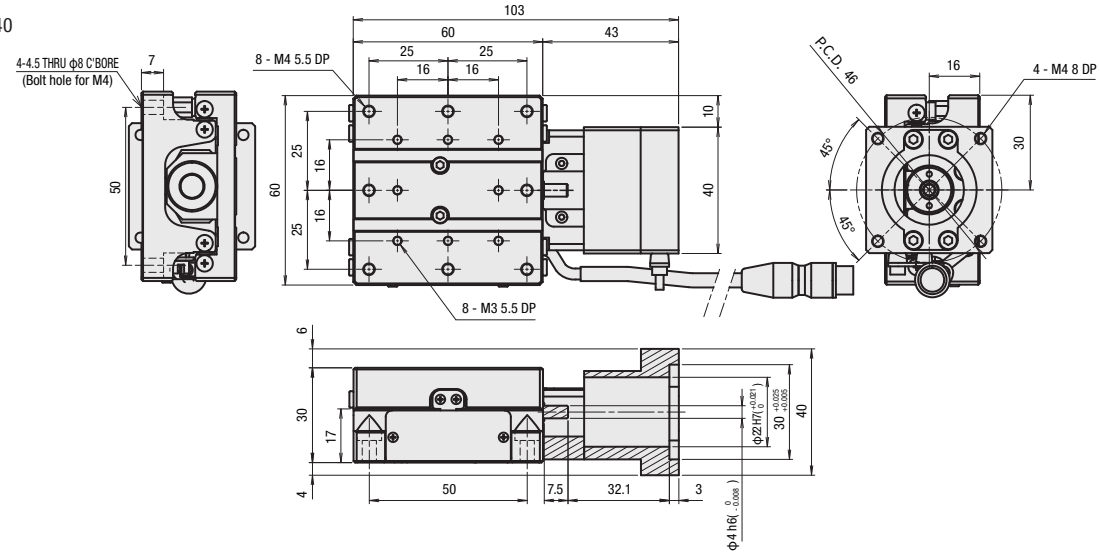

【In order to avoid damaging the motor-less product, please take the following precautions when handling them.】

◆Guarantee range

In difference to a conventional product, the guarantee range of the motor-less product will be limited due to no driving source, and notice the following attentions.

- Defect or trouble, according to motor mounting adjustment is not covered under the warranty.
- The accuracy assumes a motor test result for our inspection a guarantee level, and the accuracy after the motor mounting by the customer should be the guarantee outside.

◆Precautions and restricts on using

1.As load capacity and maximum speed depend on configuration of stage main body, please refrain from the use exceed the spec.
As distance is short between limit sensor and mechanical limit, collision with mechanical limit will incur due to over-run.
Please make sure the frequent repetition collision, it may adversely affect stage accuracy and rigidity.

2.The use with the high torque motor may give load more than the stage permission.
Please use for under 0.25N・m product or under the torque limit.

3. Very careful centering is required especially when a main body, motor and coupling is applied.
The operation that not enough centering may cause the damage or deterioration of the product early.
Please see the attached operating and assembly sheet for mounting adjustment.

4. Some products may need fixing part of the connector on your side.
Disconnection may occur before fixation due to a connector and the main body is connected only with lead. Please handle with care.

◆At the time of purchase

When placing an order, please be sure the above-mentioned, and on the premise of agreeing with guarantee coverage and attention / limitation items.

X-axis Linear Ball Guide :KXG06030V

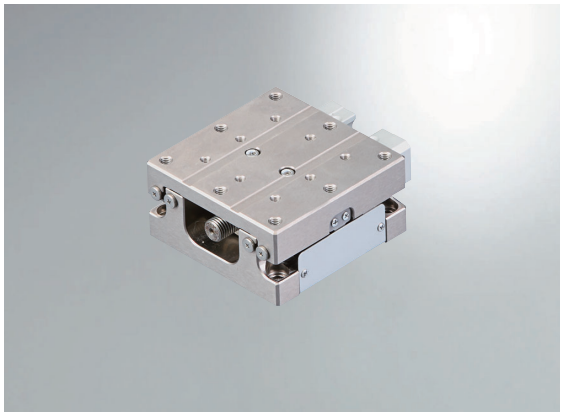

accessories		P28	S38	S40
■Motor bracket (installed on main body)		○		
■Motor Plate		○	-	-
■Coupling (with screws)		○		
■Screws	For Motor	4 of M2.5-10	4 of M3-12	2 of M4-12
	For Motor Plate	4 of M3-6	-	-
	For Main Body	4 of M4-12		
■Sensor cable (2m One end loose)		○(HR10AP-S-SB-6-2)		
■cable tie		○	-	-

Model: KXG06030V
Option code: -P28 (1)

1 Application Motor

Code	Specification
P28	□28 Steppingmotor
S38	□38 Servo motor
S40	□40 Servo motor

Pin allocation (Sensor)

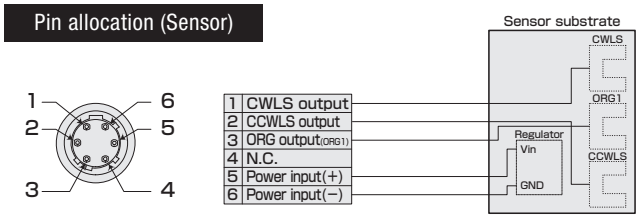

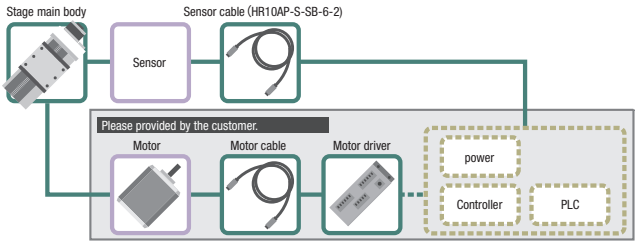

SPEC				
Model		KXG06030V-P28	KXG06030V-S38	KXG06030V-S40
Mechanical specification	Travel length	30mm		
	Table size	60×70mm		
	Feed screw (Ball screw)	ϕ8 lead 1		
	Guide	Linear ball guide		
	Main materials-Finishing	Stainless-Electroless nickel plating		
Accuracy specification	Resolution (Pulse) Full/Half	2μm/1μm		
	Resolution (Pulse) Microstep	0.1μm (1/20 on resolution)		
	MAX speed	20mm/sec		
	Uni-directional positioning accuracy	5μm		
	Repeatability positioning accuracy	±0.5μm		
	Load capacity	5kgf【49N】		
	Moment stiffness	Pitch 0.08/yaw 0.05/roll 0.05 [″/N・cm]		
	Lost motion	1μm		
	Backlash	1μm		
	Straightness	3μm		
	Parallelism	15μm		
	Motion parallelism	10μm		
	Pitching/Yawing	20″/15″		

SENSOR	
Limit sensor	Installed
Origin sensor	Installed
Slit origin sensor	–
Model	Photo microsensor EE-SX4320 (Omron Co., Ltd.)
Power voltage	DC5～24V ±10%
Consumption current	Total 60mA or less
Control output	NPN open collector output DC5~24V 8mA or less Residual voltage 0.3V or less when the load current is 2mA
Output logic	On detection (light shield condition): Output transistor OFF (Non-continuity)

※SPEC is reference for the standard model

URL:http://eng.surugaseiki.com/ E-mail:e-ost@suruga-g.co.jp
TEL.+81-3-6711-5014 FAX.+81-3-6711-5021

KXG06030V-P28

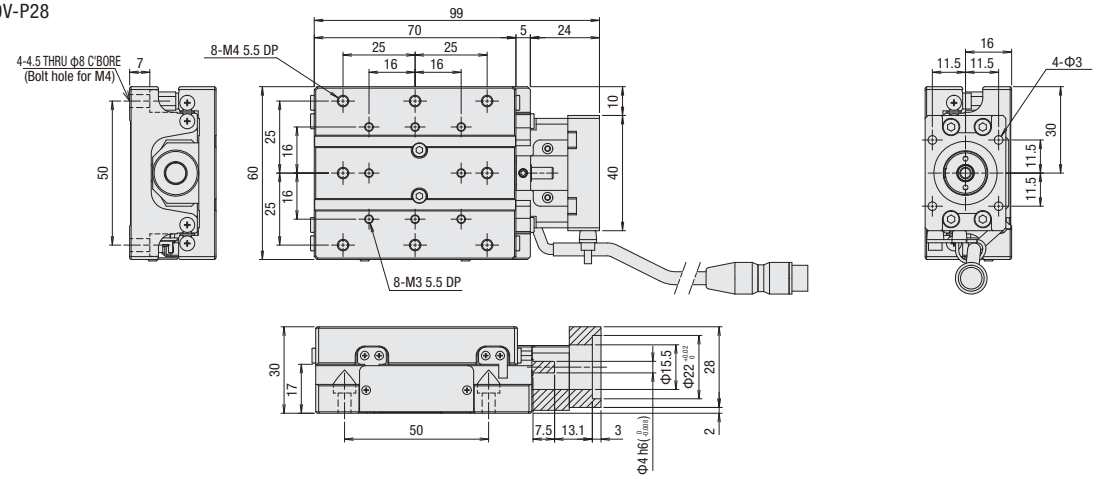

KXG06030V-S38

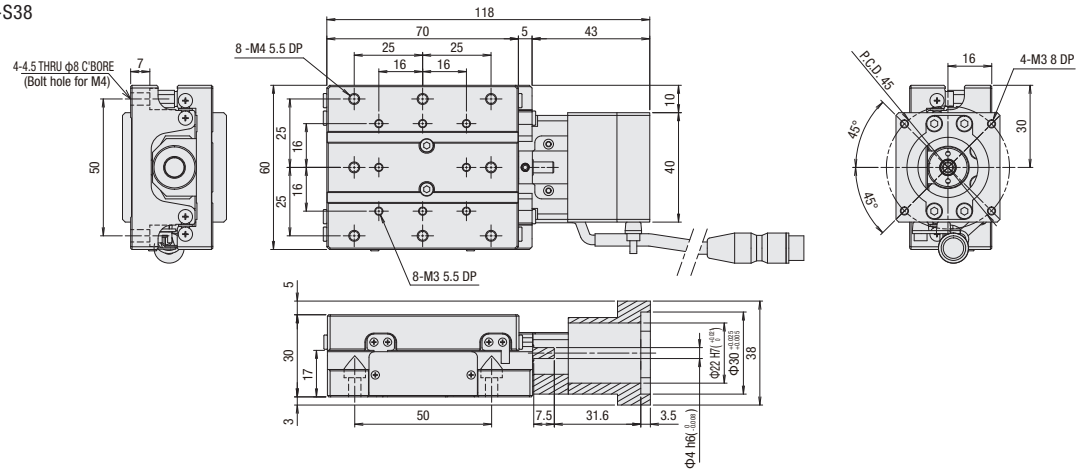

KXG06030V-S40

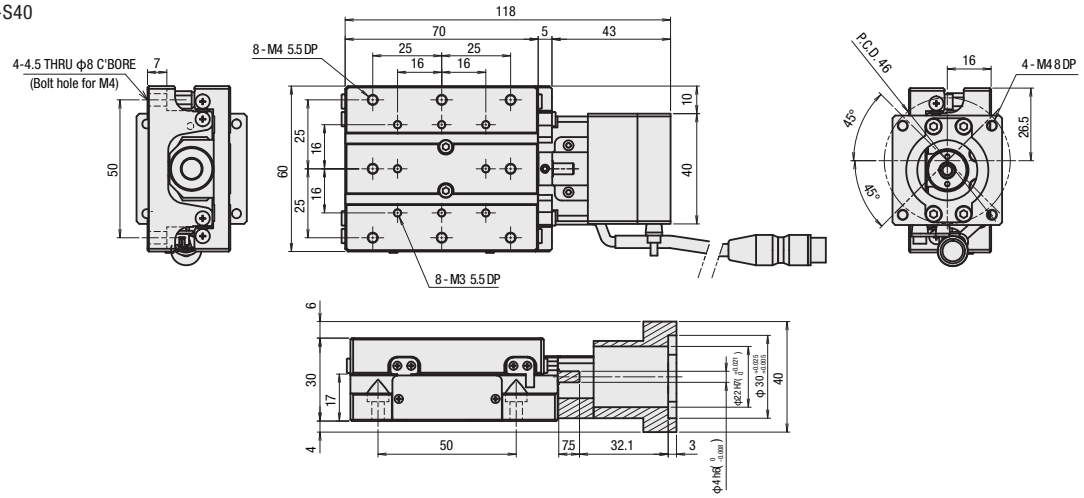

【In order to avoid damaging the motor-less product, please take the following precautions when handling them.】

◆Guarantee range

In difference to a conventional product, the guarantee range of the motor-less product will be limited due to no driving source, and notice the following attentions.

- Defect or trouble, according to motor mounting adjustment is not covered under the warranty.
- The accuracy assumes a motor test result for our inspection a guarantee level, and the accuracy after the motor mounting by the customer should be the guarantee outside.

◆Precautions and restricts on using

1.As load capacity and maximum speed depend on configuration of stage main body, please refrain from the use exceed the spec.
As distance is short between limit sensor and mechanical limit, collision with mechanical limit will incur due to over-run.
Please make sure the frequent repetition collision, it may adversely affect stage accuracy and rigidity.

2.The use with the high torque motor may give load more than the stage permission.
Please use for under 0.25N・m product or under the torque limit.

3. Very careful centering is required especially when a main body, motor and coupling is applied.
The operation that not enough centering may cause the damage or deterioration of the product early.
Please see the attached operating and assembly sheet for mounting adjustment.

4. Some products may need fixing part of the connector on your side.
Disconnection may occur before fixation due to a connector and the main body is connected only with lead. Please handle with care.

◆At the time of purchase

When placing an order, please be sure the above-mentioned, and on the premise of agreeing with guarantee coverage and attention / limitation items.

X-axis Linear Ball Guide：KXL06V-N

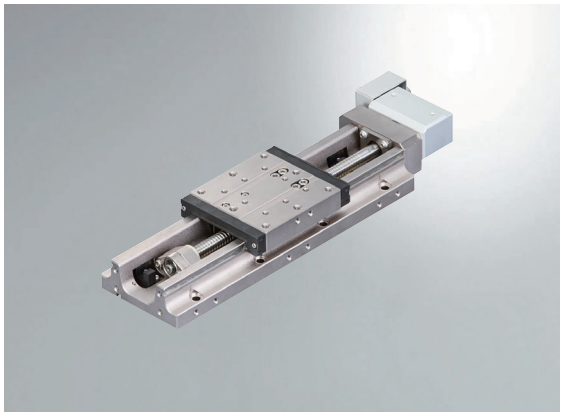

accessories			P28	S38	S40
■Motor bracket (installed on main body)			○		
■Motor Plate			○	-	-
■Coupling (with screws)			○		
■Screws	For Motor		4 of M2.5-6	4 of M3-12	2 of M4-12
	For Motor Plate		2 of M4-8	-	-
	For Main Body	30～100mm	8 of M4-14		
		150mm	14 of M4-14		
		200mm	12 of M4-14		
		300mm	16 of M4-14		
■Sensor cable (2m One end loose)			○(HR10AP-S-SB-6-2)		

Model / Selection code / Option code

KXL06 030V-N1 - P28

1 2 1

1 Travel length

030	30mm
050	50mm
075	75mm
100	100mm
150	150mm
200	200mm
300	300mm

2 Ball screw lead selection

1	Lead 1mm
2	Lead 2mm

1 Application Motor

Code	Specification
P28	□28 Steppingmotor
S38	□38 Servo motor
S40	□40 Servo motor

Pin allocation (Sensor)

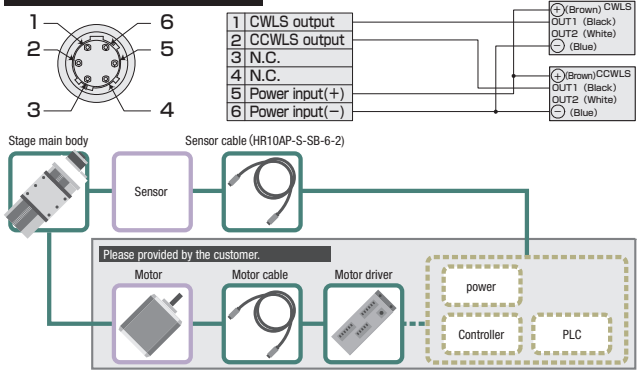

S P E C											
Model			KXL06030V-N1-P28	KXL06030V-N2-P28	KXL06050V-N1-P28	KXL06050V-N2-P28	KXL06075V-N1-P28	KXL06075V-N2-P28	KXL06100V-N2-P28	KXL06150V-N2-P28	KXL06200V-N2-P28	KXL06300V-N2-P28
Mechanical specification	Travel length		30mm		50mm		75mm		100mm	150mm	200mm	300mm
	Table size		60×60mm									
	Feed screw (Ball screw)		φ8 lead 1	φ8lead2	φ8 lead 1	φ8lead2	φ8 lead 1	φ8 lead 2	φ8 lead 2	φ8 lead 2	φ8 lead 2	φ8 lead 2
	Guide		Linear ball guide									
	Main materials-Finishing		Stainless-Electroless nickel plating									
Accuracy specification	Resolution (Pulse)	Full/Half	2μm/1μm	4μm/2μm	2μm/1μm	4μm/2μm	2μm/1μm	4μm/2μm	4μm/2μm	4μm/2μm	4μm/2μm	4μm/2μm
		Microstep	0.1μm (1/20on resolution)	0.2μm (1/20on resolution)	0.1μm (1/20on resolution)	0.2μm (1/20on resolution)	0.1μm (1/20on resolution)	0.2μm (1/20on resolution)	0.2μm (1/20on resolution)	0.2μm (1/20on resolution)	0.2μm (1/20on resolution)	0.2μm (1/20on resolution)
	MAX speed		30mm/sec	35mm/sec	30mm/sec	35mm/sec	30mm/sec	35mm/sec	45mm/sec			
	Uni-directional positioning accuracy		5μm				7μm		10μm	15μm	15μm	25μm
	Repeatability positioning accuracy		±0.5μm									
	Load capacity		12kgf【117.6N】									
	Moment stiffness		Pitch 0.05/yaw 0.05/roll 0.05 [″/N・cm]									
	Lost motion		1μm									
	Backlash		1μm									
	Straightness		3μm						5μm		7μm	
	Parallelism		15μm									
	Motion parallelism		10μm						10μm	15μm	20μm	25μm
	Pitching/Yawing		20″/15″						25″/20″		30″/ 20″	35″/20″

SENSOR	
Limit sensor	Installed
Origin sensor	–
Slit origin sensor	–
Model	Photo microsensor PM-L25 (Panasonic Industrial Devices SUNX)
Power voltage	DC5～24V ±10%
Consumption current	45mA or less (15mA or less per 1 sensor)
Control output	NPN open collector output DC30V or less 50mA or less Residual voltage 2V or less when the load current is 50mA Residual voltage 1V or less when the load current is 16mA
Output logic	On detection (light shield condition): Output transistor OFF (Non-continuity)

※SPEC is reference for the standard model

URL:http://eng.surugaseiki.com/ E-mail:e-ost@suruga-g.co.jp
TEL.+81-3-6711-5014 FAX.+81-3-6711-5021

KXL06V-N-P28

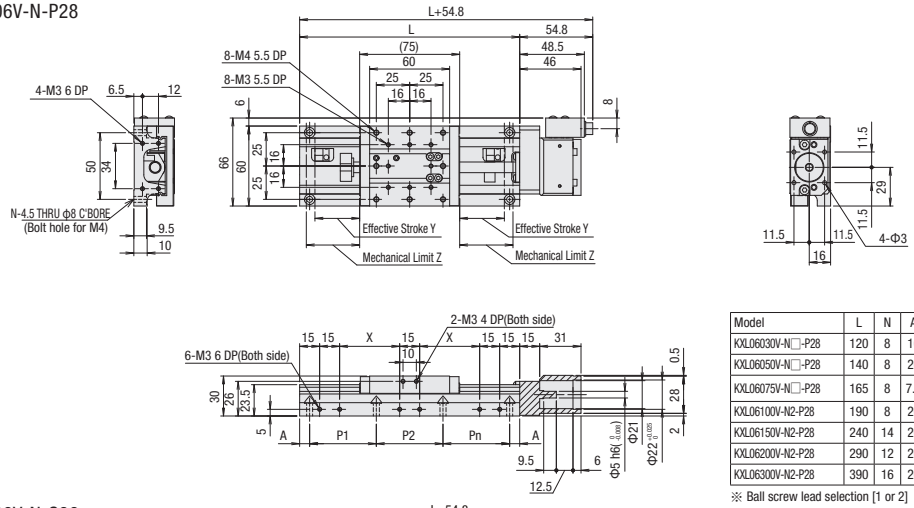

Model	L	N	A	P1	P2	P3	P4	P5	P6	P7	X	Y	Z
KXL06030V-N□-P28	120	8	10	25	50	25	—	—	—	—	22.5	11	17.5
KXL06050V-N□-P28	140	8	20	25	50	25	—	—	—	—	32.5	21	27.5
KXL06075V-N□-P28	165	8	7.5	50	50	50	—	—	—	—	45	33.5	40
KXL06100V-N2-P28	190	8	20	50	50	50	—	—	—	—	57.5	46	52.5
KXL06150V-N2-P28	240	14	20	50	25	25	25	25	50	—	82.5	71	77.5
KXL06200V-N2-P28	290	12	20	50	50	50	50	50	—	—	107.5	96	102.5
KXL06300V-N2-P28	390	16	20	50	50	50	50	50	50	50	157.5	146	152.5

※ Ball screw lead selection [1 or 2]

KXL06V-N-S38

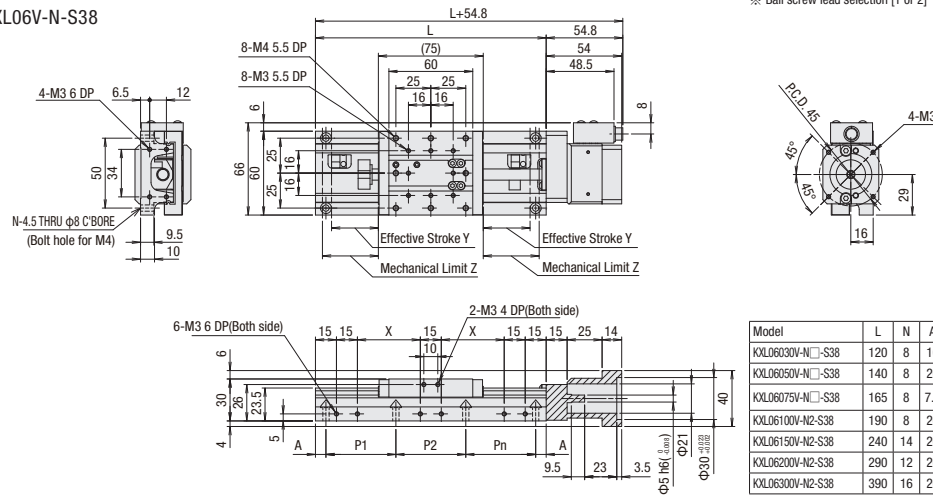

Model	L	N	A	P1	P2	P3	P4	P5	P6	P7	X	Y	z
KXL06030V-N□-S38	120	8	10	25	50	25	—	—	—	—	22.5	11	17.5
KXL06050V-N□-S38	140	8	20	25	50	25	—	—	—	—	32.5	21	27.5
KXL06075V-N□-S38	165	8	7.5	50	50	50	—	—	—	—	45	33.5	40
KXL06100V-N2-S38	190	8	20	50	50	50	—	—	—	—	57.5	46	52.5
KXL06150V-N2-S38	240	14	20	50	25	25	25	25	50	—	82.5	71	77.5
KXL06200V-N2-S38	290	12	20	50	50	50	50	50	—	—	107.5	96	102.5
KXL06300V-N2-S38	390	16	20	50	50	50	50	50	50	50	157.5	146	152.5

※ Ball screw lead selection [1 or 2]

KXL06V-N-S40

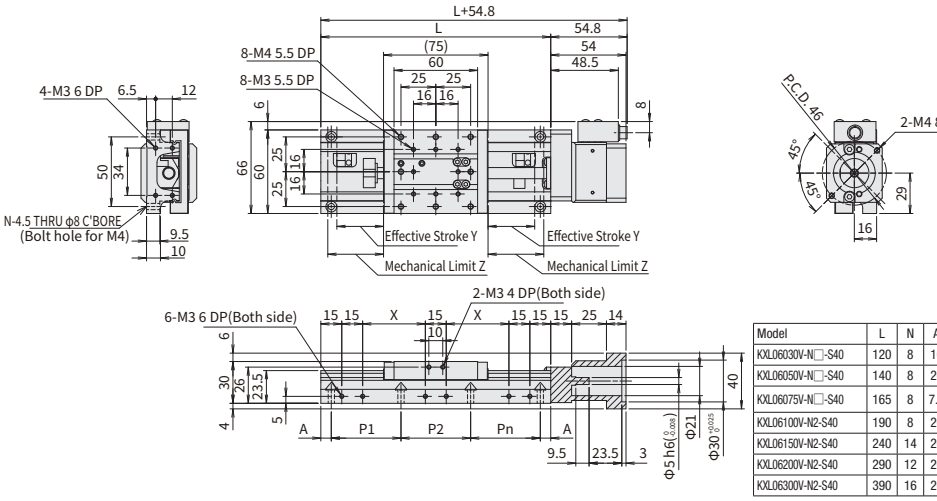

Model	L	N	A	P1	P2	P3	P4	P5	P6	P7	X	Y	Z
KXL06030V-N□-S40	120	8	10	25	50	25	—	—	—	—	22.5	11	17.5
KXL06050V-N□-S40	140	8	20	25	50	25	—	—	—	—	32.5	21	27.5
KXL06075V-N□-S40	165	8	7.5	50	50	50	—	—	—	—	45	33.5	40
KXL06100V-N2-S40	190	8	20	50	50	50	—	—	—	—	57.5	46	52.5
KXL06150V-N2-S40	240	14	20	50	25	25	25	25	50	—	82.5	71	77.5
KXL06200V-N2-S40	290	12	20	50	50	50	50	50	—	—	107.5	96	102.5
KXL06300V-N2-S40	390	16	20	50	50	50	50	50	50	50	157.5	146	152.5

※ Ball screw lead selection [1 or 2]

【In order to avoid damaging the motor-less product, please take the following precautions when handling them.】

◆Guarantee range

In difference to a conventional product, the guarantee range of the motor-less product will be limited due to no driving source, and notice the following attentions.
- Defect or trouble, according to motor mounting adjustment is not covered under the warranty.
- The accuracy assumes a motor test result for our inspection a guarantee level, and the accuracy after the motor mounting by the customer should be the guarantee outside.

◆Precautions and restricts on using

1.As load capacity and maximum speed depend on configuration of stage main body, please refrain from the use exceed the spec.
As distance is short between limit sensor and mechanical limit, collision with mechanical limit will incur due to over-run.
Please make sure the frequent repetition collision, it may adversely affect stage accuracy and rigidity.

2.The use with the high torque motor may give load more than the stage permission.
Please use for under 0.25N・m product or under the torque limit.

3. Very careful centering is required especially when a main body, motor and coupling is applied.
The operation that not enough centering may cause the damage or deterioration of the product early.
Please see the attached operating and assembly sheet for mounting adjustment.

4. Some products may need fixing part of the connector on your side.
Disconnection may occur before fixation due to a connector and the main body is connected only with lead. Please handle with care.

◆At the time of purchase

When placing an order, please be sure the above-mentioned, and on the premise of agreeing with guarantee coverage and attention / limitation items.

X-axis Linear Ball Guide：KXL06V-C

accessories			P28	S38	S40
■Motor bracket (installed on main body)			○		
■Motor Plate			○	-	-
■Coupling (with screws)			○		
■Screws	For Motor		4 of M2.5-6	4 of M3-12	2 of M4-12
	For Motor Plate		2 of M4-8	-	-
	For Main Body	30～100mm	8 of M4-14		
		150mm	14 of M4-14		
		200mm	12 of M4-14		
		300mm	16 of M4-14		
■Sensor cable (2m One end loose)			○(HR10AP-S-SB-6-2)		

Model: **KXL06** | Selection code: **030V-C1** (1, 2) | Option code: **- P28** (1)

1 Travel length

Code	Travel length
030	30mm
050	50mm
075	75mm
100	100mm
150	150mm
200	200mm
300	300mm

2 Ball screw lead selection

Code	Lead
1	Lead 1mm
2	Lead 2mm

1 Application Motor

Code	Specifi cation
P28	□28 Steppingmotor
S38	□38 Servo motor
S40	□40 Servo motor

Pin allocation (Sensor)

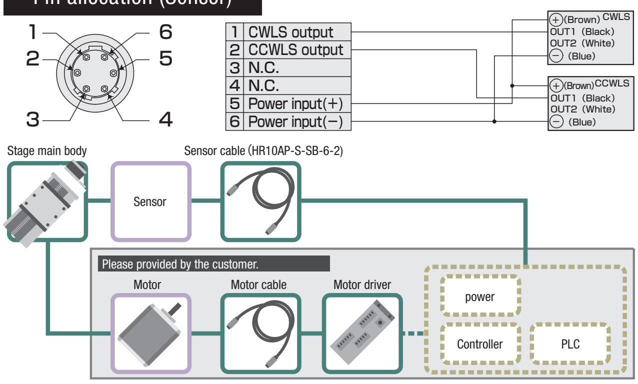

SPEC

		Model	KXL06030V-C1-P28	KXL06030V-C2-P28	KXL06050V-C1-P28	KXL06050V-C2-P28	KXL06075V-C1-P28	KXL06075V-C2-P28	KXL06100V-C2-P28	KXL06150V-C2-P28	KXL06200V-C2-P28	KXL06300V-C2-P28
Mechanical specification	Travel length		30mm		50mm		75mm		100mm	150mm	200mm	300mm
	Table size		60×60mm									
	Feed screw (Ball screw)		ϕ8 lead 1	ϕ8 lead 2	ϕ8 lead 1	ϕ8 lead 2	ϕ8 lead 1	ϕ8 lead 2	ϕ8 lead 2	ϕ8 lead 2	ϕ8 lead 2	ϕ8 lead 2
	Guide		Linear ball guide									
	Main materials-Finishing		Stainless-Electroless nickel plating									
Accuracy specification	Resolution (Pulse)	Full/Half	2μm/1μm	4μm/2μm	2μm/1μm	4μm/2μm	2μm/1μm	4μm/2μm	4μm/2μm	4μm/2μm	4μm/2μm	4μm/2μm
		Microstep	0.1μm (1/20on resolution)	0.2μm (1/20on resolution)	0.1μm (1/20on resolution)	0.2μm (1/20on resolution)	0.1μm (1/20on resolution)	0.2μm (1/20on resolution)	0.2μm (1/20on resolution)	0.2μm (1/20on resolution)	0.2μm (1/20on resolution)	0.2μm (1/20on resolution)
	MAX speed		30mm/sec	35mm/sec	30mm/sec	35mm/sec	30mm/sec	35mm/sec	45mm/sec			
	Uni-directional positioning accuracy		5μm				7μm		10μm	15μm	15μm	25μm
	Repeatability positioning accuracy		±0.5μm									
	Load capacity		12kgf【117.6N】									
	Moment stiffness		Pitch 0.05/yaw 0.05/roll 0.05 [″/N・cm]									
	Lost motion		1μm									
	Backlash		1μm									
	Straightness		3μm						5μm		7μm	
	Parallelism		15μm									
	Motion parallelism		10μm						10μm	15μm	20μm	25μm
	Pitching/Yawing		20″/15″						25″/20″		30″/20″	35″/20″

SENSOR

Limit sensor	Installed
Origin sensor	–
Slit origin sensor	–
Model	Photo microsensor PM-L25 (Panasonic Industrial Devices SUNX)
Power voltage	DC5～24V ±10%
Consumptioncurrent	45mA or less (15mA or less per 1 sensor)
Control output	NPN open collector output DC30V or less 50mA or less Residual voltage 2V or less when the load current is 50mA Residual voltage 1V or less when the load current is 16mA
Output logic	On detection (light shield condition): Output transistor OFF (Non-continuity)

※SPEC is reference for the standard model

URL:http://eng.surugaseiki.com/ E-mail:e-ost@suruga-g.co.jp
TEL.+81-3-6711-5014 FAX.+81-3-6711-5021

KXL06V-C-P28

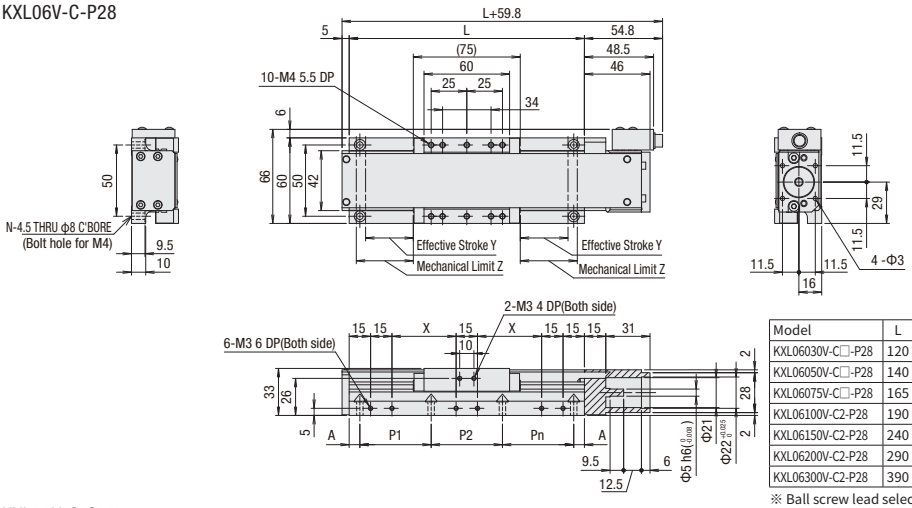

Model	L	N	A	P1	P2	P3	P4	P5	P6	P7	X	Y	Z
KXL06030V-C□-P28	120	8	10	25	50	25	—	—	—	—	22.5	11	17.5
KXL06050V-C□-P28	140	8	20	25	50	25	—	—	—	—	32.5	21	27.5
KXL06075V-C□-P28	165	8	7.5	50	50	50	—	—	—	—	45	33.5	40
KXL06100V-C2-P28	190	8	20	50	50	50	—	—	—	—	57.5	46	52.5
KXL06150V-C2-P28	240	14	20	50	25	25	25	25	50	—	82.5	71	77.5
KXL06200V-C2-P28	290	12	20	50	50	50	50	50	—	—	107.5	96	102.5
KXL06300V-C2-P28	390	16	20	50	50	50	50	50	50	50	157.5	146	152.5

※ Ball screw lead selection [1 or 2]

KXL06V-C-S38

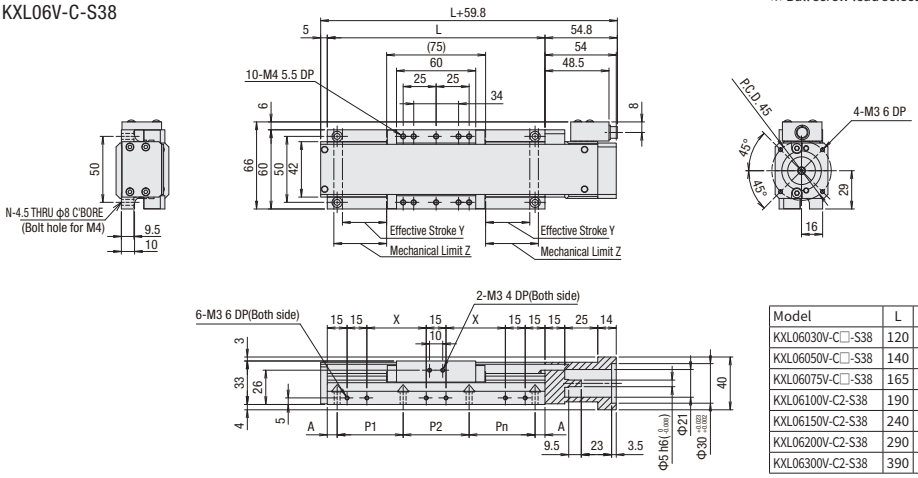

Model	L	N	A	P1	P2	P3	P4	P5	P6	P7	X	Y	Z
KXL06030V-C□-S38	120	8	10	25	50	25	—	—	—	—	22.5	11	17.5
KXL06050V-C□-S38	140	8	20	25	50	25	—	—	—	—	32.5	21	27.5
KXL06075V-C□-S38	165	8	7.5	50	50	50	—	—	—	—	45	33.5	40
KXL06100V-C2-S38	190	8	20	50	50	50	—	—	—	—	57.5	46	52.5
KXL06150V-C2-S38	240	14	20	50	25	25	25	25	50	—	82.5	71	77.5
KXL06200V-C2-S38	290	12	20	50	50	50	50	50	—	—	107.5	96	102.5
KXL06300V-C2-S38	390	16	20	50	50	50	50	50	50	50	157.5	146	152.5

※ Ball screw lead selection [1 or 2]

KXL06V-C-S40

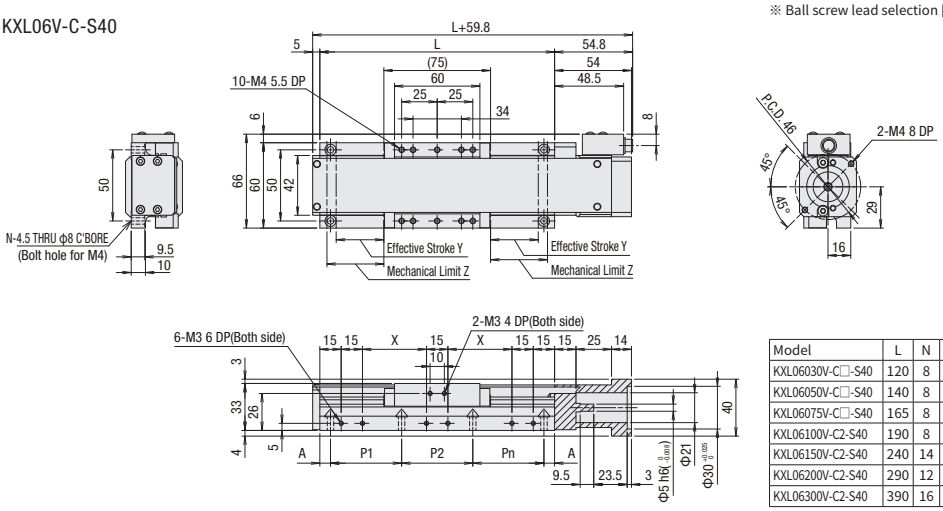

Model	L	N	A	P1	P2	P3	P4	P5	P6	P7	X	Y	Z
KXL06030V-C□-S40	120	8	10	25	50	25	—	—	—	—	22.5	11	17.5
KXL06050V-C□-S40	140	8	20	25	50	25	—	—	—	—	32.5	21	27.5
KXL06075V-C□-S40	165	8	7.5	50	50	50	—	—	—	—	45	33.5	40
KXL06100V-C2-S40	190	8	20	50	50	50	—	—	—	—	57.5	46	52.5
KXL06150V-C2-S40	240	14	20	50	25	25	25	25	50	—	82.5	71	77.5
KXL06200V-C2-S40	290	12	20	50	50	50	50	50	—	—	107.5	96	102.5
KXL06300V-C2-S40	390	16	20	50	50	50	50	50	50	50	157.5	146	152.5

※ Ball screw lead selection [1 or 2]

【In order to avoid damaging the motor-less product, please take the following precautions when handling them.】

◆Guarantee range

In difference to a conventional product, the guarantee range of the motor-less product will be limited due to no driving source, and notice the following attentions.
- Defect or trouble, according to motor mounting adjustment is not covered under the warranty.
- The accuracy assumes a motor test result for our inspection a guarantee level, and the accuracy after the motor mounting by the customer should be the guarantee outside.

◆Precautions and restricts on using

1.As load capacity and maximum speed depend on configuration of stage main body, please refrain from the use exceed the spec.
As distance is short between limit sensor and mechanical limit, collision with mechanical limit will incur due to over-run.
Please make sure the frequent repetition collision, it may adversely affect stage accuracy and rigidity.

2.The use with the high torque motor may give load more than the stage permission.
Please use for under 0.25N・m product or under the torque limit.

3. Very careful centering is required especially when a main body, motor and coupling is applied.
The operation that not enough centering may cause the damage or deterioration of the product early.
Please see the attached operating and assembly sheet for mounting adjustment.

4. Some products may need fixing part of the connector on your side.
Disconnection may occur before fixation due to a connector and the main body is connected only with lead. Please handle with care.

◆At the time of purchase

When placing an order, please be sure the above-mentioned, and on the premise of agreeing with guarantee coverage and attention / limitation items.

X-axis Cross Roller Guide :KXC04015V

accessories			P28	S38	S40
■Motor bracket (installed on main body)			○		
■Coupling (with screws)			○		
■Screws	For Motor	KXC04015V	2 of M2.5-6	4 of M3-12	2 of M4-12
		KXC06020V	2 of M2.5-5		
	For Main Body	KXC04015V	4 of M3-16		
		KXC06020V	4 of M4-16		
■Sensor cable (2m One end loose)			○(HR10AP-S-SB-6-2)		
■Hex wrench (for motor mounting)			○	-	-

Model: KXC04015V - Option code: P28

1

1 Application Motor

Code	Specifi cation
P28	□28 Steppingmotor
S38	□38 Servo motor
S40	□40 Servo motor

Pin allocation (Sensor)

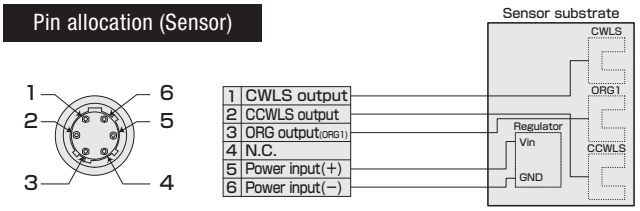

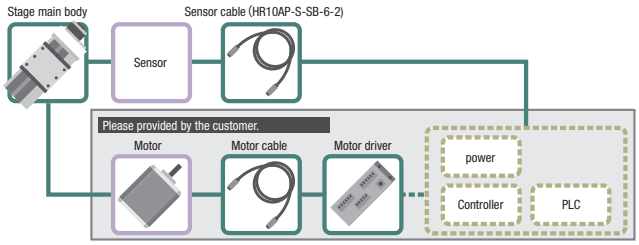

S P E C					
Model			KXC04015V-P28	KXC04015V-S38	KXC04015V-S40
Mechanical specification	Travel length		15mm		
	Table size		40×40mm		
	Feed screw (Ball screw)		ϕ6 lead 1		
	Guide		Crossed roller guide		
	Main materials-Finishing		Aluminum—Black almite finishing		
Accuracy specification	Resolution (Pulse)	Full/Half	2μm/1μm		
		Microstep	0.1μm (1/20 on resolution)		
	MAX speed		10mm/sec		
	Uni-directional positioning accuracy		10μm		
	Repeatability positioning accuracy		±0.2μm		
	Load capacity		5.0kgf【49N】		
	Moment stiffness		Pitch 0.33/yaw 0.44/roll 0.37 [″/N・cm]		
	Lost motion		1μm		
	Backlash		0.5μm		
	Straightness		3μm		
	Parallelism		30μm		
	Motion parallelism		10μm		
	Pitching/Yawing		25″/20″		

SENSOR	
Limit sensor	Installed
Origin sensor	Installed
Slit origin sensor	–
Model	Photo microsensor EE-SX4320 (Omron Co., Ltd.)
Power voltage	DC5～24V ±10%
Consumption current	Total 60mA or less
Control output	NPN open collector output DC5~24V 8mA or less Residual voltage 0.3V or less when the load current is 2mA
Output logic	On detection (light shield condition): Output transistor OFF (Non-continuity)

※SPEC is reference for the standard model

URL:http://eng.surugaseiki.com/ E-mail:e-ost@suruga-g.co.jp
TEL.+81-3-6711-5014 FAX.+81-3-6711-5021

KXC04015V-P28

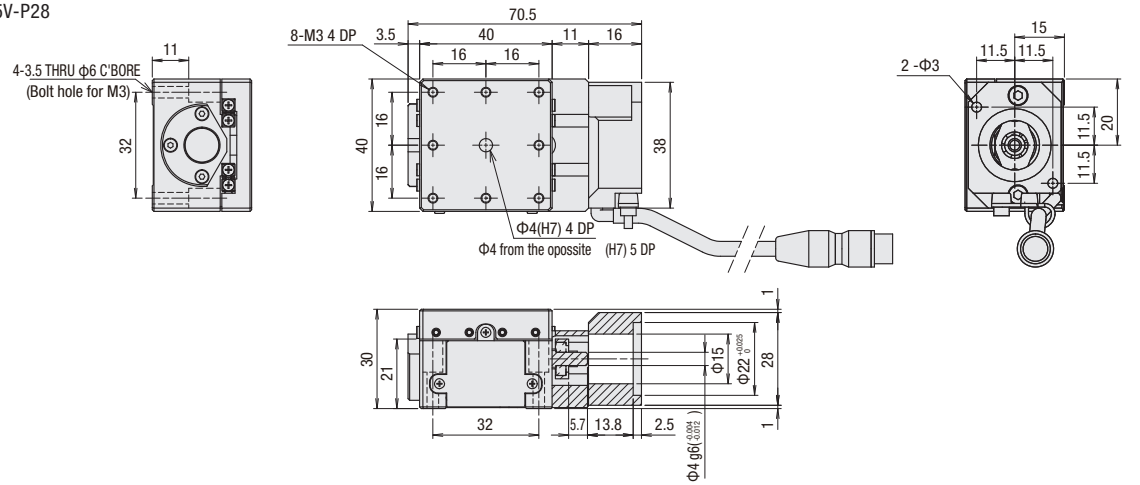

KXC04015V-S38

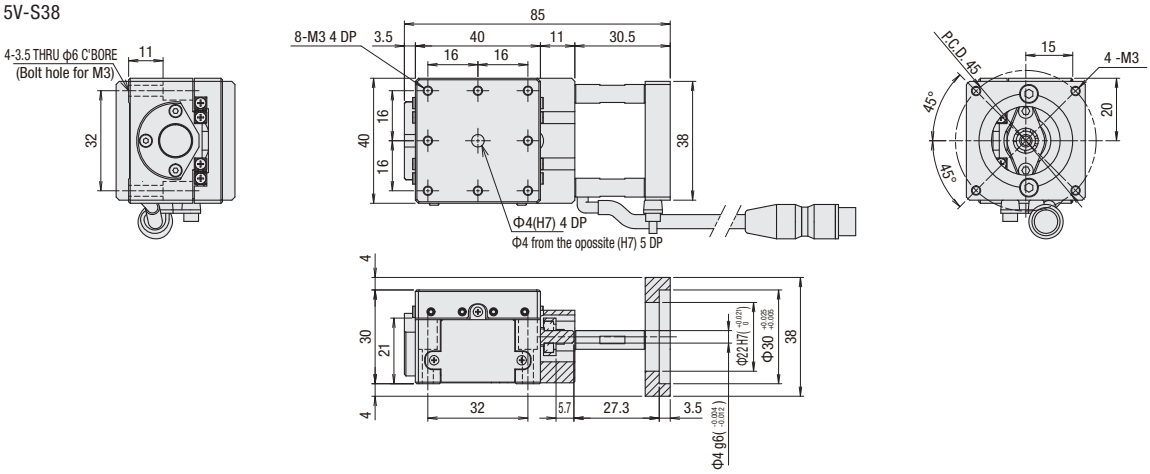

KXC04015V-S40

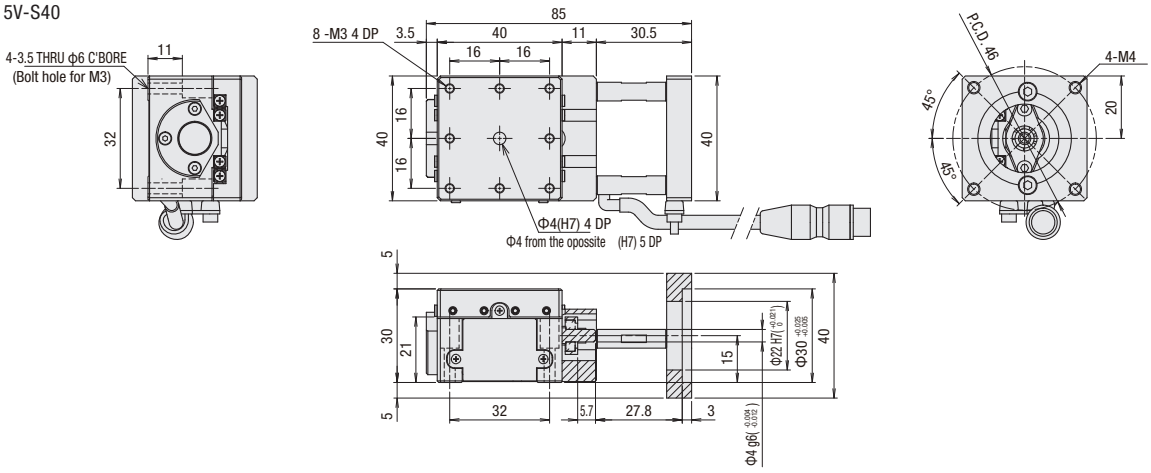

【In order to avoid damaging the motor-less product, please take the following precautions when handling them.】

◆Guarantee range

In difference to a conventional product, the guarantee range of the motor-less product will be limited due to no driving source, and notice the following attentions.

- Defect or trouble, according to motor mounting adjustment is not covered under the warranty.
- The accuracy assumes a motor test result for our inspection a guarantee level, and the accuracy after the motor mounting by the customer should be the guarantee outside.

◆Precautions and restricts on using

1.As load capacity and maximum speed depend on configuration of stage main body, please refrain from the use exceed the spec.
As distance is short between limit sensor and mechanical limit, collision with mechanical limit will incur due to over-run.
Please make sure the frequent repetition collision, it may adversely affect stage accuracy and rigidity.

2.The use with the high torque motor may give load more than the stage permission.
Please use for under 0.25N・m product or under the torque limit.

3. Very careful centering is required especially when a main body, motor and coupling is applied.
The operation that not enough centering may cause the damage or deterioration of the product early.
Please see the attached operating and assembly sheet for mounting adjustment.

4. Some products may need fixing part of the connector on your side.
Disconnection may occur before fixation due to a connector and the main body is connected only with lead. Please handle with care.

◆At the time of purchase

When placing an order, please be sure the above-mentioned, and on the premise of agreeing with guarantee coverage and attention / limitation items.

X-axis Cross Roller Guide：KXC06020V

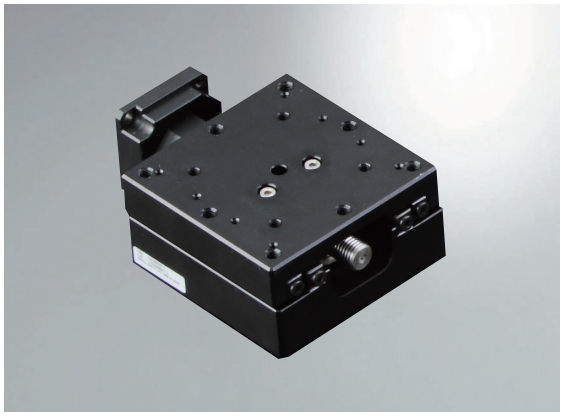

accessories			P28	S38	S40
■Motor bracket (installed on main body)			○		
■Coupling (with screws)			○		
■Screws	For Motor	KXC04015V	2 of M2.5-6	4 of M3-12	2 of M4-12
		KXC06020V	2 of M2.5-5		
	For Main Body	KXC04015V	4 of M3-16		
		KXC06020V	4 of M4-16		
■Sensor cable(2m One end loose)			○(HR10AP-S-SB-6-2)		
■Hex wrench (for motor mounting)			○	-	-

Model: **KXC06020V** - Option code: **P28**

1

1 Application Motor

Code	Specification
P28	□28 Steppingmotor
S38	□38 Servo motor
S40	□40 Servo motor

Pin allocation (Sensor)

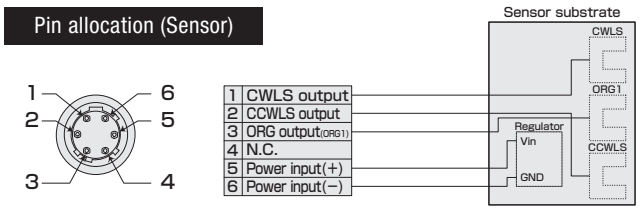

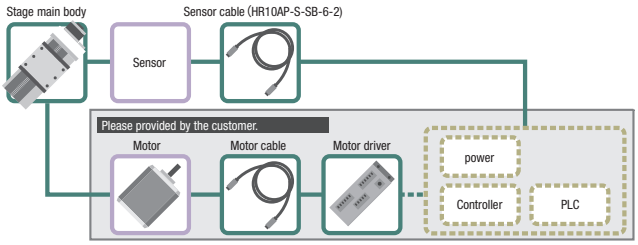

SPEC					
Model			KXC06020V-P28	KXC06020V-S38	KXC06020V-S40
Mechanical specification	Travel length		20mm		
	Table size		60×60mm		
	Feed screw (Ball screw)		φ8 lead 1		
	Guide		Crossed roller guide		
	Main materials-Finishing		Aluminum—Black almite finishing		
Accuracy specification	Resolution (Pulse)	Full/Half	2μm/1μm		
		Microstep	0.1μm (1/20 on resolution)		
	MAX speed		20mm/sec		
	Uni-directional positioning accuracy		5μm		
	Repeatability positioning accuracy		±0.2μm		
	Load capacity		5.0kgf【49N】		
	Moment stiffness		Pitch 0.15/yaw 0.12/roll 0.07 [″/N・cm]		
	Lost motion		1μm		
	Backlash		0.5μm		
	Straightness		3μm		
	Parallelism		30μm		
	Motion parallelism		10μm		
	Pitching/Yawing		20″/15″		

SENSOR	
Limit sensor	Installed
Origin sensor	Installed
Slit origin sensor	–
Model	Photo microsensor EE-SX4320 (Omron Co., Ltd.)
Power voltage	DC5～24V ±10%
Consumption current	Total 60mA or less
Control output	NPN open collector output DC5~24V 8mA or less Residual voltage 0.3V or less when the load current is 2mA
Output logic	On detection (light shield condition): Output transistor OFF (Non-continuity)

※SPEC is reference for the standard model

URL:http://eng.surugaseiki.com/ E-mail:e-ost@suruga-g.co.jp
TEL.+81-3-6711-5014 FAX.+81-3-6711-5021

KXC06020V-P28

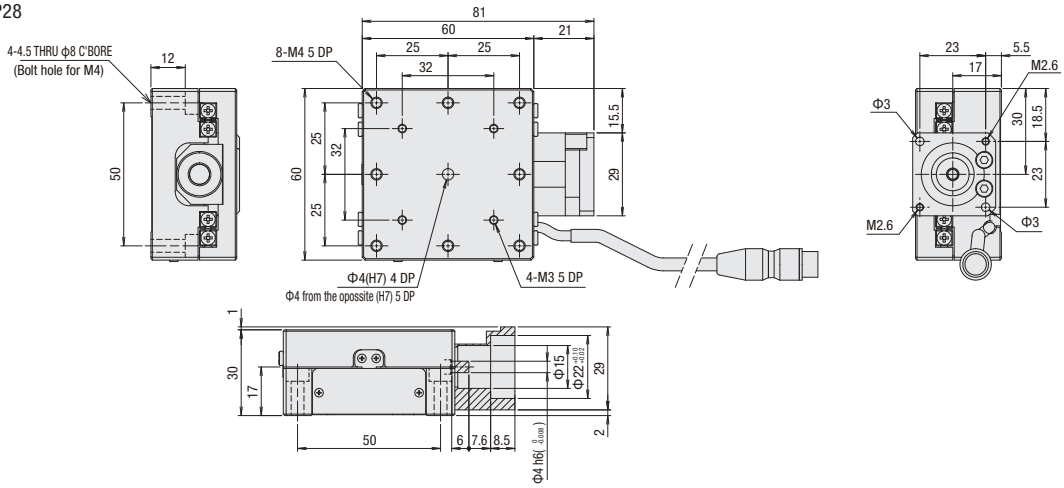

KXC06020V-S38

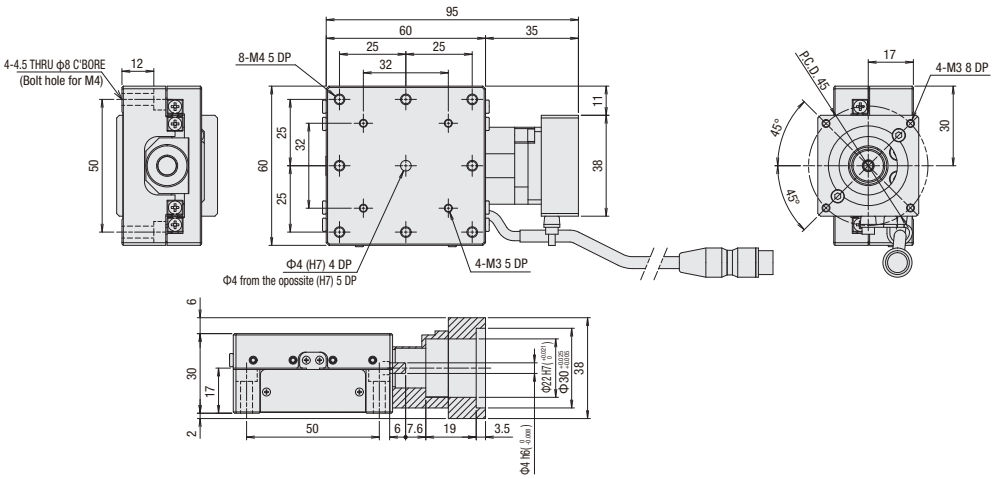

KXC06020V-S40

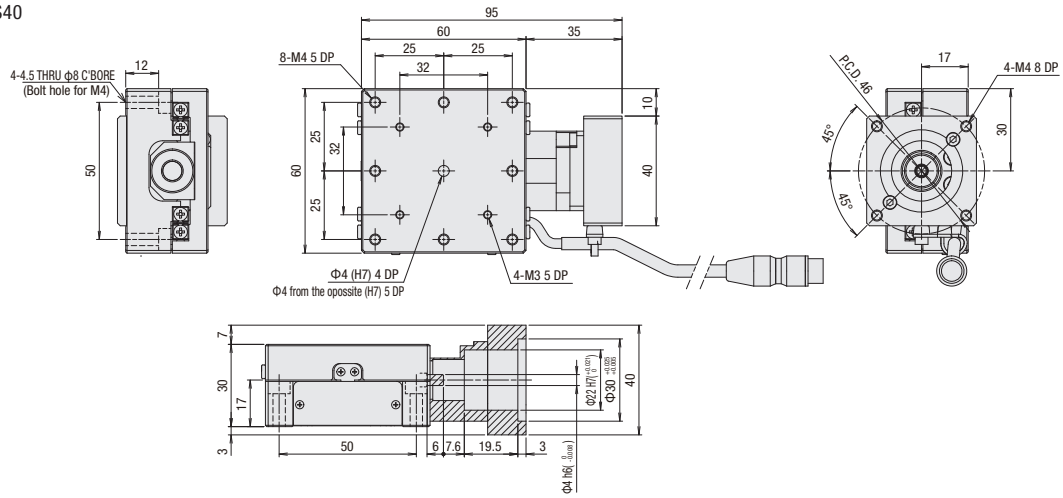

【In order to avoid damaging the motor-less product, please take the following precautions when handling them.】

◆Guarantee range

In difference to a conventional product, the guarantee range of the motor-less product will be limited due to no driving source, and notice the following attentions.

- Defect or trouble, according to motor mounting adjustment is not covered under the warranty.
- The accuracy assumes a motor test result for our inspection a guarantee level, and the accuracy after the motor mounting by the customer should be the guarantee outside.

◆Precautions and restricts on using

1.As load capacity and maximum speed depend on configuration of stage main body, please refrain from the use exceed the spec.
As distance is short between limit sensor and mechanical limit, collision with mechanical limit will incur due to over-run.
Please make sure the frequent repetition collision, it may adversely affect stage accuracy and rigidity.

2.The use with the high torque motor may give load more than the stage permission.
Please use for under 0.25N・m product or under the torque limit.

3. Very careful centering is required especially when a main body, motor and coupling is applied.
The operation that not enough centering may cause the damage or deterioration of the product early.
Please see the attached operating and assembly sheet for mounting adjustment.

4. Some products may need fixing part of the connector on your side.
Disconnection may occur before fixation due to a connector and the main body is connected only with lead. Please handle with care.

◆At the time of purchase

When placing an order, please be sure the above-mentioned, and on the premise of agreeing with guarantee coverage and attention / limitation items.

Horizontal Z-axis Cross Roller Guide :KHC06004V

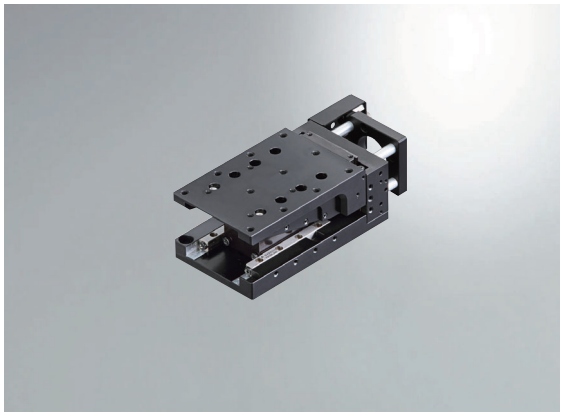

accessories		P28	S38	S40
■Motor bracket (installed on main body)		○		
■Coupling (with screws)		○		
■Screws	For Motor	4 of M2.5-6	4 of M3-12	2 of M4-12
	For Main Body	4 of M4-12		
■Sensor cable (2m One end loose)		○(HR10AP-S-SB-6-2)		
■Hex wrench (for motor mounting)		○	-	-

Model / Option code

KHC06004V - P28

1

1 Application Motor

Code	Specifi cation
P28	□28 Steppingmotor
S38	□38 Servo motor
S40	□40 Servo motor

Pin allocation (Sensor)

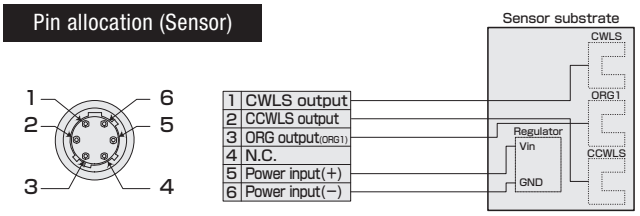

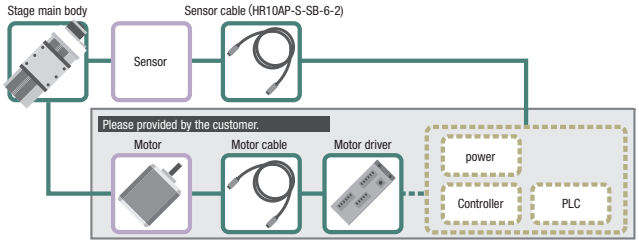

S P E C				
Model		KHC06004V-P28	KHC06004V-S38	KHC06004V-S40
Mechanical specification	Travel length	4mm		
	Table size	60×60mm		
	Feed screw	Ball screw φ8 lead 1		
	Guide	Wedge type Crossed roller guide		
	Main materials-Finishing	Aluminum—Black almite finishing		
Accuracy specification	Resolution (Pulse)	0.5μm (Full) /0.25μm (Half)		
	MAX speed	2.5mm/sec		
	Uni-directional positioning accuracy	7μm		
	Repeatability positioning accuracy	±0.5μm		
	Load capacity	7kgf【68.6N】		
	Moment stiffness	Pitch 0.2/yaw 0.04/roll 0.14 [″/N・cm]		
	Lost motion	1μm		
	Parallelism	50μm		

SENSOR	
Limit sensor	Installed
Origin sensor	Installed
Slit origin sensor	—
Model	Photo microsensor EE-SX4320 (Omron Co., Ltd.)
Power voltage	DC5～24V ±10%
Consumption current	Total 60mA or less
Control output	NPN open collector output DC5～24V 8mA or less Residual voltage 0.3V or less when the load current is 2mA
Output logic	On detection (light shield condition): Output transistor OFF (Non-continuity)

※SPEC is reference for the standard model

URL:http://eng.surugaseiki.com/ E-mail:e-ost@suruga-g.co.jp
TEL.+81-3-6711-5014 FAX.+81-3-6711-5021

KHC06004V-P28

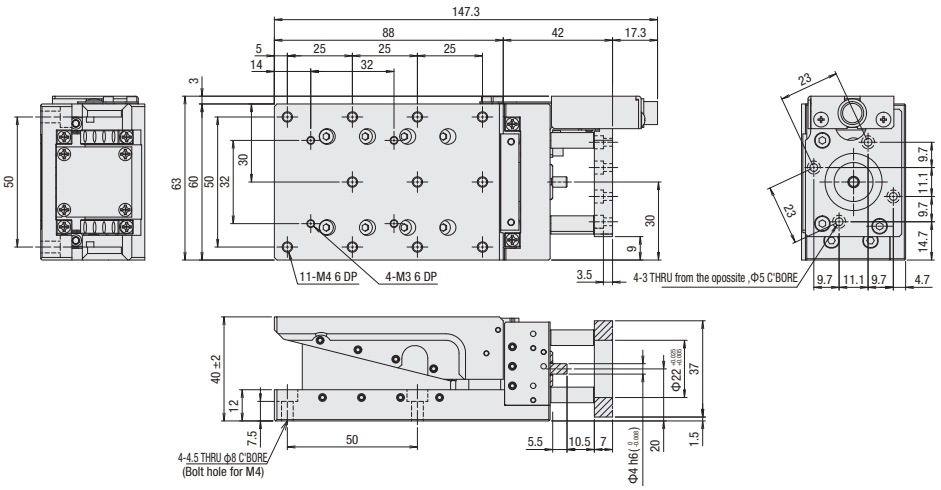

KHC06004V-S38

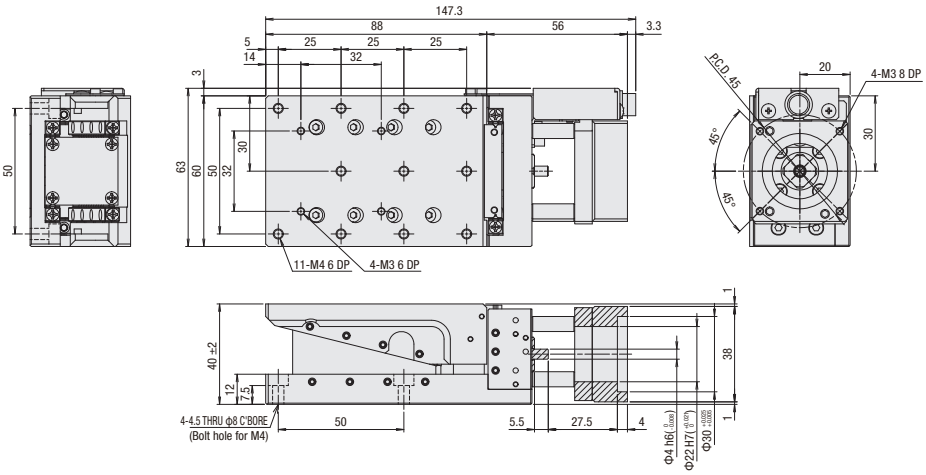

KHC06004V-S40

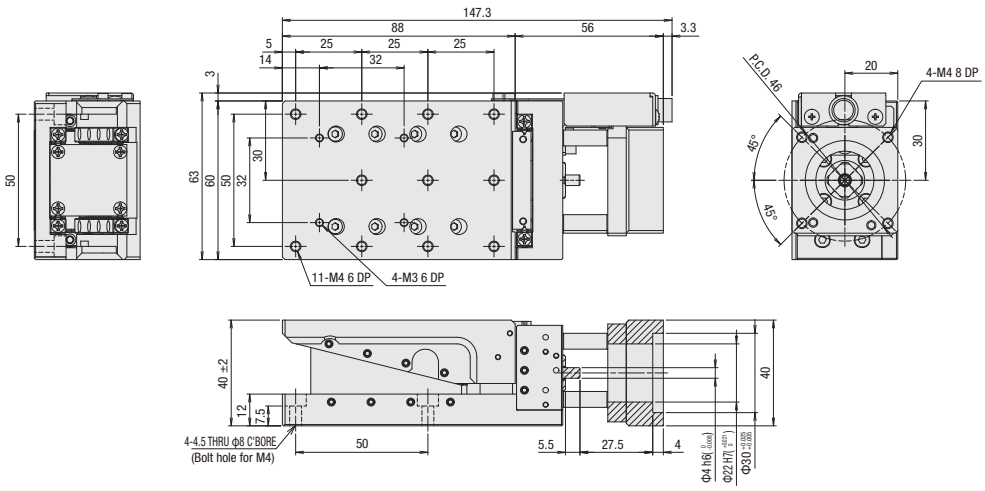

【In order to avoid damaging the motor-less product, please take the following precautions when handling them.】

◆Guarantee range

In difference to a conventional product, the guarantee range of the motor-less product will be limited due to no driving source, and notice the following attentions.

- Defect or trouble, according to motor mounting adjustment is not covered under the warranty.
- The accuracy assumes a motor test result for our inspection a guarantee level, and the accuracy after the motor mounting by the customer should be the guarantee outside.

◆Precautions and restricts on using

1.As load capacity and maximum speed depend on configuration of stage main body, please refrain from the use exceed the spec.
As distance is short between limit sensor and mechanical limit, collision with mechanical limit will incur due to over-run.
Please make sure the frequent repetition collision, it may adversely affect stage accuracy and rigidity.

2.The use with the high torque motor may give load more than the stage permission.
Please use for under 0.25N・m product or under the torque limit.

3. Very careful centering is required especially when a main body, motor and coupling is applied.
The operation that not enough centering may cause the damage or deterioration of the product early.
Please see the attached operating and assembly sheet for mounting adjustment.

4. Some products may need fixing part of the connector on your side.
Disconnection may occur before fixation due to a connector and the main body is connected only with lead. Please handle with care.

◆At the time of purchase

When placing an order, please be sure the above-mentioned, and on the premise of agreeing with guarantee coverage and attention / limitation items.

Ball Screw Type Sinemotion Goniometer Stages□60：KGB06V

accessories		P28	S38	S40
■Motor bracket (installed on main body)		○		
■Coupling (with screws)		○		
■Screws	For Motor	4 of M2.5-6	4 of M3-12	2 of M4-12
	For Main Body	4 of M4-10		
■Sensor cable (2m One end loose)		○(HR10AP-S-SB-6-2)		

Model	Selection code		Option code
KGB06	050V -	L -	P28
	1	2	1

1 Height of center rotation (W.D)

050	50mm
075	75mm
100	100mm
125	125mm

2 Sensor cover location

L	L position
R	Opposite hand

1 Application Motor

Code	Specifi cation
P28	□28 Steppingmotor
S38	□38 Servo motor
S40	□40 Servo motor

Pin allocation (Sensor)

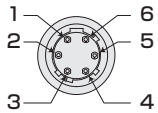

1	CWLS output
2	CCWLS output
3	ORG output(ORG1)
4	N.C.
5	Power input(+)
6	Power input(−)

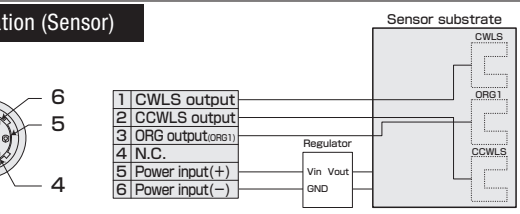

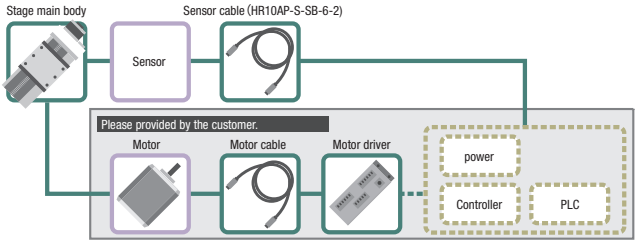

SPEC					
Model		KGB06050V-L-P28	KGB06075V-L-P28	KGB06100V-L-P28	KGB06125V-L-P28
Mechanical specification	Travel length	±8.5°	±5.5°	±5°	±4°
	Table size	60×60mm			
	Travel mechanism	Ball screw φ6 lead 1			
	Guide	Crossed roller guide			
	Main materials-Finishing	Aluminum—Black almite finishing			
Dimensional tolerance	Height of stage	25±0.2mm			
	Height of center rotation	50±0.2mm	75±0.2mm	100±0.2mm	125±0.2mm
	Runout accuracy of center rotation	0.01mm			
Accuracy specification	Resolution (Pulse)	≒0.0021°	≒0.0014°	≒0.0011°	≒0.0009°
	MAX speed	31.5°/sec [15kHz]	21°/sec [15kHz]	16.5°/sec [15kHz]	13.5°/sec [15kHz]
	Repeatability positioning accuracy	±0.001°			
	Load capacity	5kgf【49N】			
	Moment stiffness	Pitch 0.30/yaw 0.10/roll 0.11 [″/N・cm]			
	Lost motion	0.003°			

SENSOR	
Limit sensor	Installed
Origin sensor	Installed
Slit origin sensor	—
Model	Photo microsensor EE-SX4320 (Omron Co., Ltd.)
Power voltage	DC5～24V ±10%
Consumption current	Total 60mA or less
Control output	NPN open collector output DC5~24V 8mA or less Residual voltage 0.3V or less when the load current is 2mA
Output logic	On detection (light shield condition): Output transistor OFF (Non-continuity)

※SPEC is reference for the standard model

KGB06V-P28

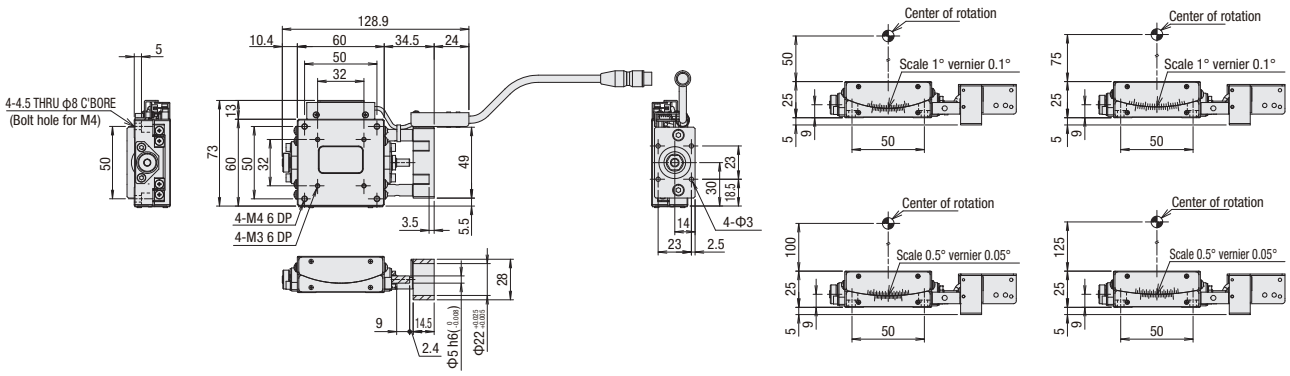

KGB06V-S38

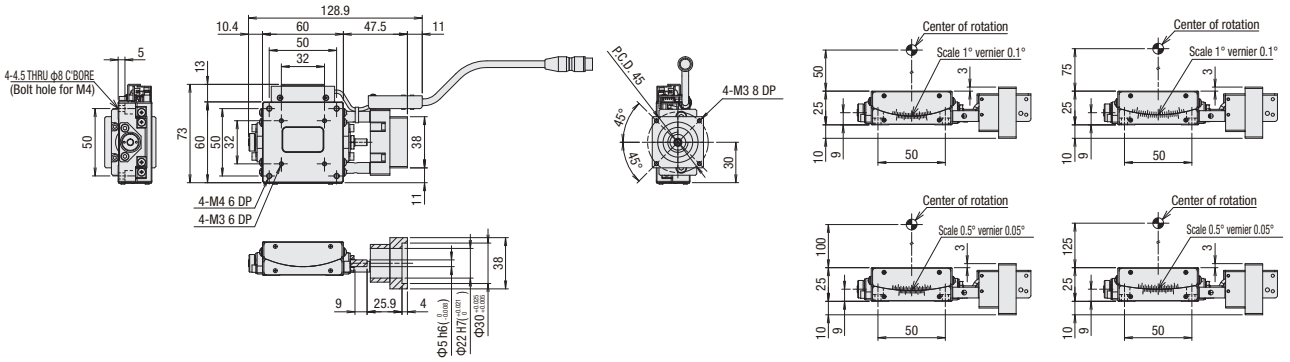

KGB06V-S40

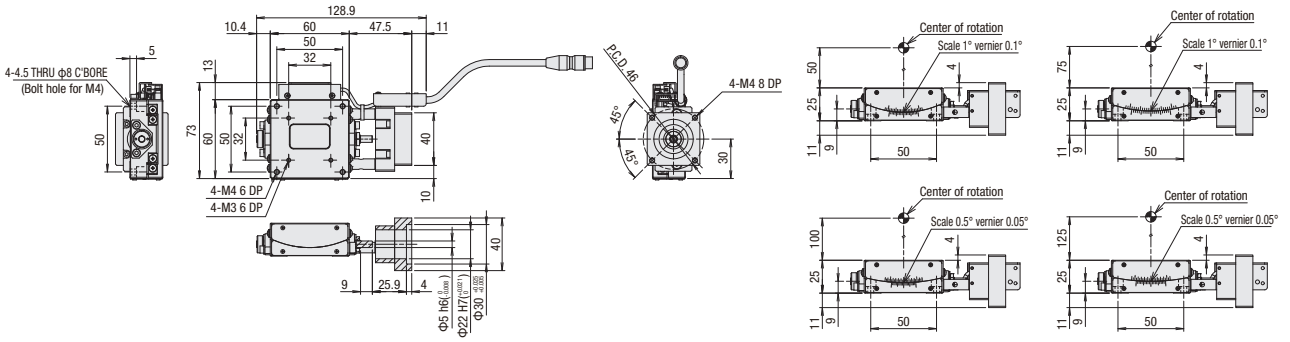

【In order to avoid damaging the motor-less product, please take the following precautions when handling them.】

◆Guarantee range

In difference to a conventional product, the guarantee range of the motor-less product will be limited due to no driving source, and notice the following attentions.

- Defect or trouble, according to motor mounting adjustment is not covered under the warranty.
- The accuracy assumes a motor test result for our inspection a guarantee level, and the accuracy after the motor mounting by the customer should be the guarantee outside.

◆Precautions and restricts on using

1.As load capacity and maximum speed depend on configuration of stage main body, please refrain from the use exceed the spec.
As distance is short between limit sensor and mechanical limit, collision with mechanical limit will incur due to over-run.
Please make sure the frequent repetition collision, it may adversely affect stage accuracy and rigidity.

2.The use with the high torque motor may give load more than the stage permission.
Please use for under 0.25N・m product or under the torque limit.

3. Very careful centering is required especially when a main body, motor and coupling is applied.
The operation that not enough centering may cause the damage or deterioration of the product early.
Please see the attached operating and assembly sheet for mounting adjustment.

4. Some products may need fixing part of the connector on your side.
Disconnection may occur before fixation due to a connector and the main body is connected only with lead. Please handle with care.

◆At the time of purchase

When placing an order, please be sure the above-mentioned, and on the premise of agreeing with guarantee coverage and attention / limitation items.

Goniometer Stage□40：KGW04040V / KGW04060V

accessories			P28	S38	S40
■Motor bracket (installed on main body)			○		
■Coupling (with screws)			○		
■Screws	For Motor	KGW04	2 of M2.5-6	4 of M3-12	2 of M4-12
		KGW06	4 of M2.5-6		
	For Main Body	KGW04	4 of M3-6		
		KGW06	4 of M4-10		
■Sensor cable (2m One end loose)			○(HR10AP-S-SB-6-2)		

Model / Selection code / Option code

KGW04 040V-L - P28

1 2 1

1 Height of center rotation (W.D)

040	40mm
060	60mm

2 Sensor cover location specification

L	L position
R	Opposite hand

1 Application Motor

Code	Specification
P28	□28 Steppingmotor
S38	□38 Servo motor
S40	□40 Servo motor

Pin allocation (Sensor)

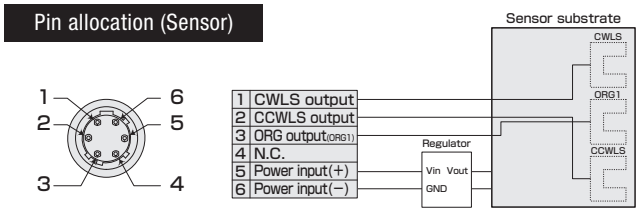

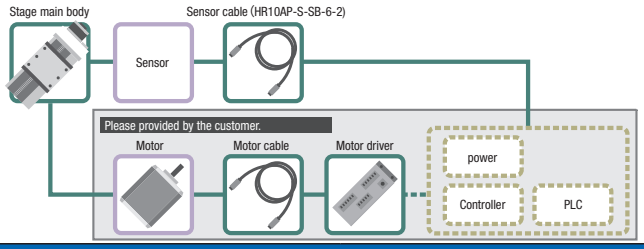

SPEC							
Model		KGW04040V-L-P28	KGW04040V-L-S38	KGW04040V-L-S40	KGW04060V-L-P28	KGW04060V-L-S38	KGW04060V-L-S40
Mechanical specification	Travel length	±8°			±6°		
	Table size	40×40mm					
	Travel mechanism	Worm gear (1/240)					
	Guide	Crossed roller guide					
	Main materials-Finishing	Phosphor bronze—Black coating finishing,Aluminum—Black almite finishing					
Dimensional tolerance	Height of stage	20±0.2mm					
	Height of center rotation	40±0.2mm			60±0.2mm		
	Runout accuracy of center rotation	0.01mm					
Accuracy specification	Resolution/Pulse	0.003° (Full)					
	MAX speed	15°/sec [5kHz]					
	Repeatability positioning accuracy	±0.005°					
	Load capacity	3kgf【29.4N】					
	Moment stiffness	Pitch 1.30/yaw 1.16/roll 0.27 [″/N・cm]					
	Lost motion	0.01°					

SENSOR	
Limit sensor	Installed
Origin sensor	Installed
Slit origin sensor	—
Model	Photo microsensor EE-SX4320 (Omron Co., Ltd.)
Power voltage	DC5～24V ±10%
Consumption current	Total 60mA or less
Control output	NPN open collector output DC5~24V 8mA or less Residual voltage 0.3V or less when the load current is 2mA
Output logic	On detection (light shield condition): Output transistor OFF (Non-continuity)

※SPEC is reference for the standard model

URL:http://eng.surugaseiki.com/ E-mail:e-ost@suruga-g.co.jp
TEL.+81-3-6711-5014 FAX.+81-3-6711-5021

KGW04 series V-P28

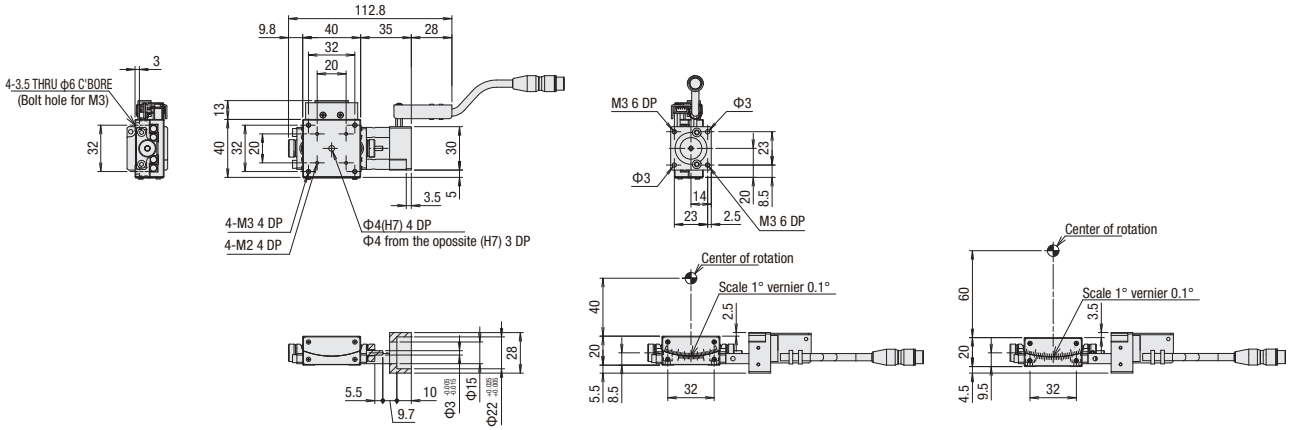

KGW04 series V-S38

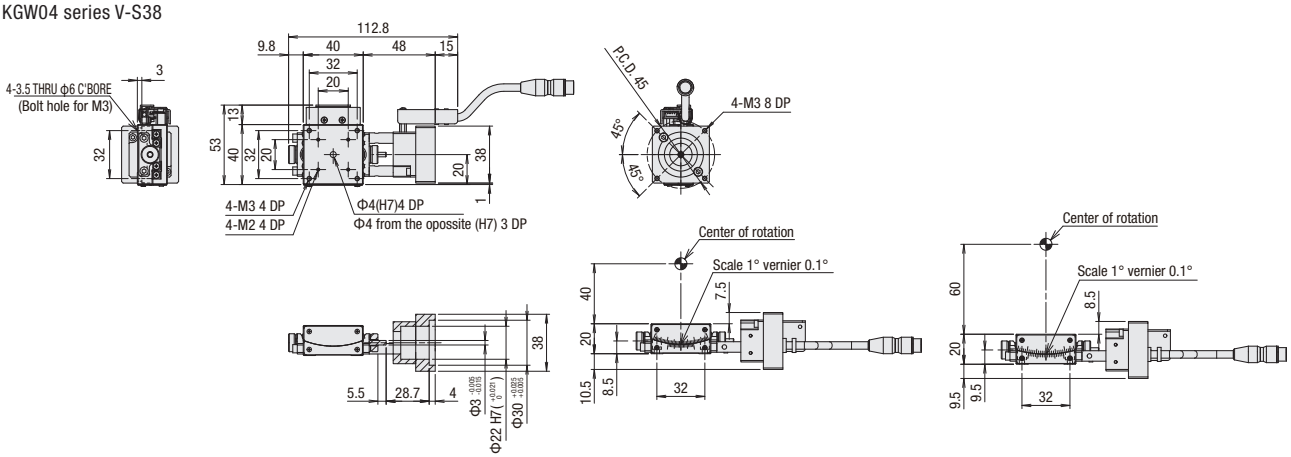

KGW04 series V-S40

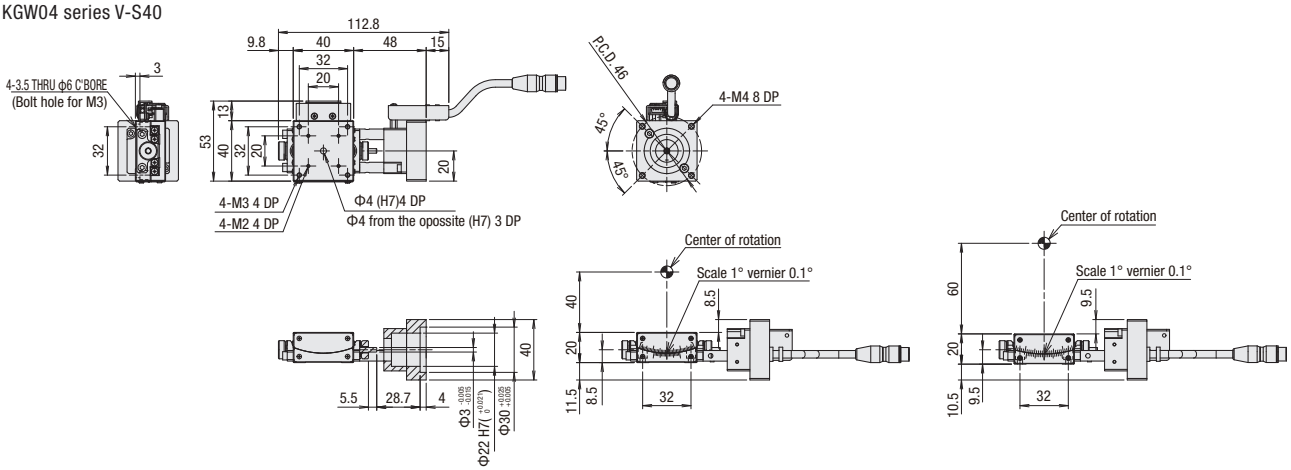

【In order to avoid damaging the motor-less product, please take the following precautions when handling them.】

◆Guarantee range

In difference to a conventional product, the guarantee range of the motor-less product will be limited due to no driving source, and notice the following attentions.

- Defect or trouble, according to motor mounting adjustment is not covered under the warranty.
- The accuracy assumes a motor test result for our inspection a guarantee level, and the accuracy after the motor mounting by the customer should be the guarantee outside.

◆Precautions and restricts on using

1.As load capacity and maximum speed depend on configuration of stage main body, please refrain from the use exceed the spec.
As distance is short between limit sensor and mechanical limit, collision with mechanical limit will incur due to over-run.
Please make sure the frequent repetition collision, it may adversely affect stage accuracy and rigidity.

2.The use with the high torque motor may give load more than the stage permission.
Please use for under 0.25N・m product or under the torque limit.

3. Very careful centering is required especially when a main body, motor and coupling is applied.
The operation that not enough centering may cause the damage or deterioration of the product early.
Please see the attached operating and assembly sheet for mounting adjustment.

4. Some products may need fixing part of the connector on your side.
Disconnection may occur before fixation due to a connector and the main body is connected only with lead. Please handle with care.

◆At the time of purchase

When placing an order, please be sure the above-mentioned, and on the premise of agreeing with guarantee coverage and attention / limitation items.

Goniometer Stage□60：KGW06V

accessories			P28	S38	S40
■Motor bracket (installed on main body)			○		
■Coupling (with screws)			○		
■Screws	For Motor	KGW04	2 of M2.5-6	4 of M3-12	2 of M4-12
		KGW06	4 of M2.5-6		
	For Main Body	KGW04	4 of M3- 6		
		KGW06	4 of M4-10		
■Sensor cable (2m One end loose)			○(HR10AP-S-SB-6-2)		

Model / Selection code / Option code

KGW06 050V-L-P28

1 2 1

1 Height of center rotation (W.D)

050	50mm
075	75mm
100	100mm
125	125mm

2 Sensor cover location specification

L	L position
R	Opposite hand

1 Application Motor

Code	Speci cation
P28	□28 Steppingmotor
S38	□38 Servo motor
S40	□40 Servo motor

Pin allocation (Sensor)

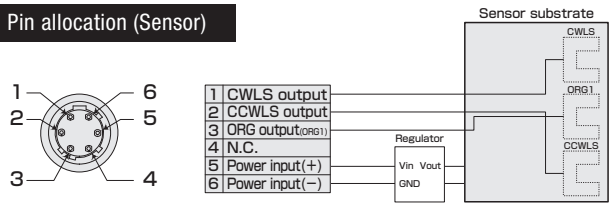

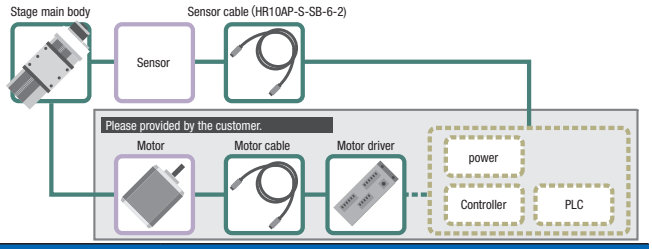

SPEC					
Model		KGW06050V-L-P28	KGW06075V-L-P28	KGW06100V-L-P28	KGW06125V-L-P28
Mechanical specification	Travel length	±10°	±8°	±6°	±5°
	Table size	60×60mm			
	Travel mechanism (Reduction ratio)	Worm gear (1/160)	Worm gear (1/225)	Worm gear (1/292)	Worm gear (1/360)
	Guide	Crossed roller guide			
	Main materials-Finishing	Aluminum—Black almite finishing			
Dimensional tolerance	Height of stage	25±0.2mm			
	Height of center rotation	50±0.2mm	75±0.2mm	100±0.2mm	125±0.2mm
	Runout accuracy of center rotation	0.01mm			
Accuracy specification	Resolution/Pulse	0.0045° (Full)	0.0032° (Full)	0.002466° (Full)	0.002° (Full)
	MAX speed	22.5°/sec [5kHz]	16°/sec [5kHz]	12.5°/sec [5kHz]	10°/sec [5kHz]
	Repeatability positioning accuracy	±0.003°			
	Load capacity	5kgf【49N】			
	Moment stiffness	Pitch 0.30/yaw 0.10/roll 0.11 [″/N・cm]			
	Lost motion	0.01°			

SENSOR	
Limit sensor	Installed
Origin sensor	Installed
Slit origin sensor	—
Model	Photo microsensor EE-SX4320 (Omron Co., Ltd.)
Power voltage	DC5～24V ±10%
Consumption current	Total 60mA or less
Control output	NPN open collector output DC5~24V 8mA or less Residual voltage 0.3V or less when the load current is 2mA
Output logic	On detection (light shield condition): Output transistor OFF (Non-continuity)

※SPEC is reference for the standard model

URL:http://eng.surugaseiki.com/ E-mail:e-ost@suruga-g.co.jp
TEL.+81-3-6711-5014 FAX.+81-3-6711-5021

KGW06 series V-P28

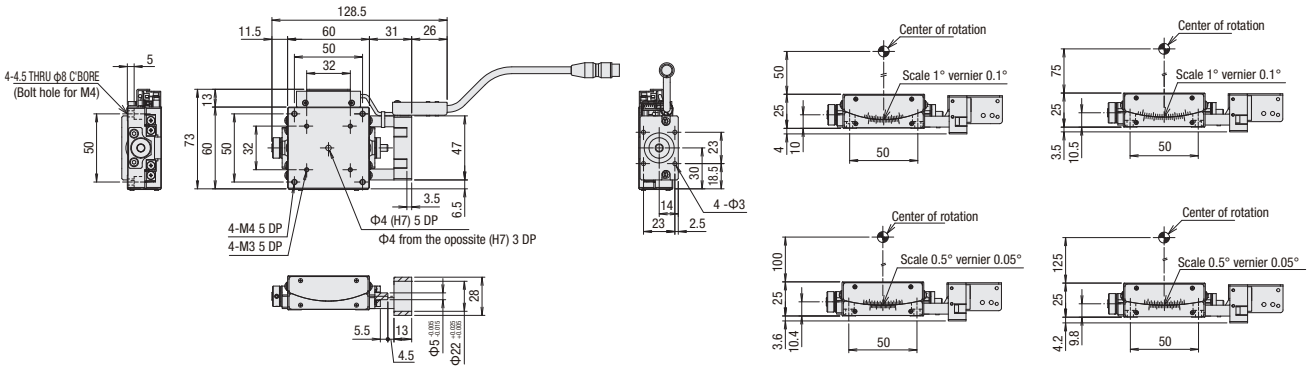

KGW06 series V-S38

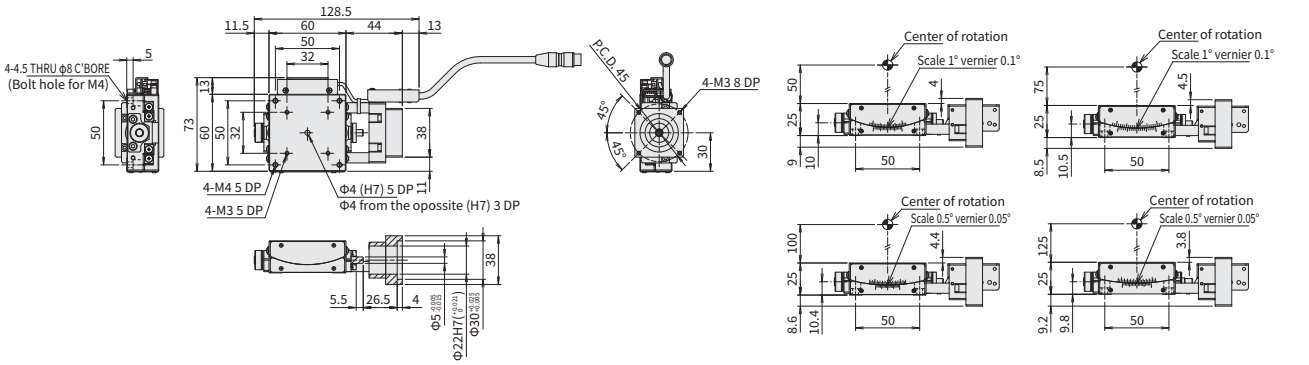

KGW06 series V-S40

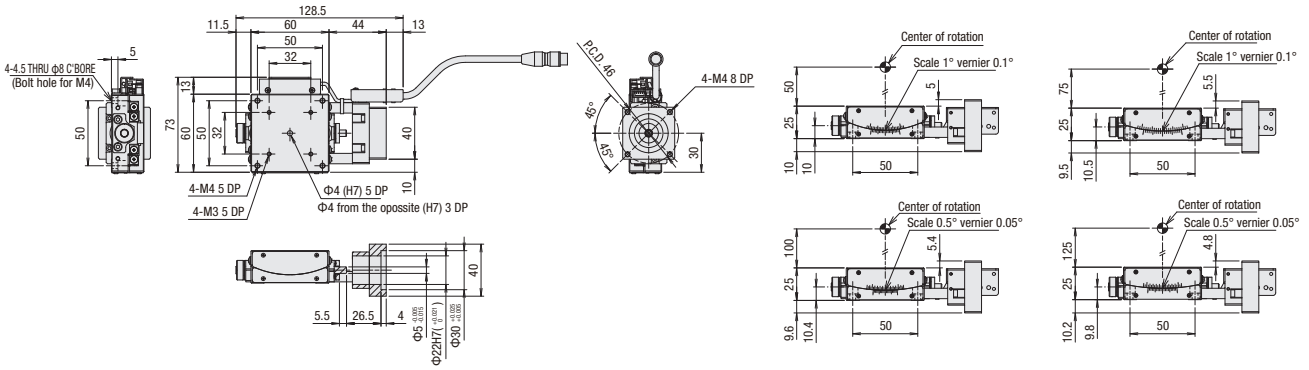

【In order to avoid damaging the motor-less product, please take the following precautions when handling them.】

◆Guarantee range

In difference to a conventional product, the guarantee range of the motor-less product will be limited due to no driving source, and notice the following attentions.

- Defect or trouble, according to motor mounting adjustment is not covered under the warranty.
- The accuracy assumes a motor test result for our inspection a guarantee level, and the accuracy after the motor mounting by the customer should be the guarantee outside.

◆Precautions and restricts on using

1.As load capacity and maximum speed depend on configuration of stage main body, please refrain from the use exceed the spec.
As distance is short between limit sensor and mechanical limit, collision with mechanical limit will incur due to over-run.
Please make sure the frequent repetition collision, it may adversely affect stage accuracy and rigidity.

2.The use with the high torque motor may give load more than the stage permission.
Please use for under 0.25N・m product or under the torque limit.

3. Very careful centering is required especially when a main body, motor and coupling is applied.
The operation that not enough centering may cause the damage or deterioration of the product early.
Please see the attached operating and assembly sheet for mounting adjustment.

4. Some products may need fixing part of the connector on your side.
Disconnection may occur before fixation due to a connector and the main body is connected only with lead. Please handle with care.

◆At the time of purchase

When placing an order, please be sure the above-mentioned, and on the premise of agreeing with guarantee coverage and attention / limitation items.

Sinemotion Rotary Stage ϕ40：KRB04017V

accessories			P28	S38	S40
■Motor bracket (installed on main body)			○		
■Coupling (with screws)			○		
■Screws	For Motor		4 of M2.5-6	4 of M3-12	2 of M4-12
	For Main Body	KRB04	3 of M3-25		
		KRB06	3 of M4-25		
■Sensor cable (2m One end loose)			○(HR10AP-S-SB-6-2)		

Model / Option code

KRB04017V-P28

1

1 Application Motor

Code	Speci cation
P28	□28 Steppingmotor
S38	□38 Servo motor
S40	□40 Servo motor

Pin allocation (Sensor)

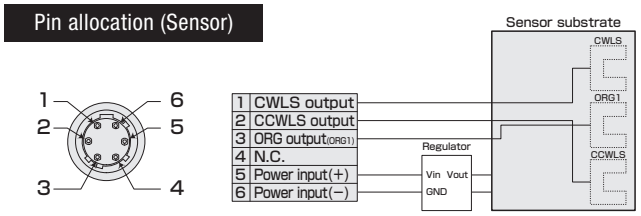

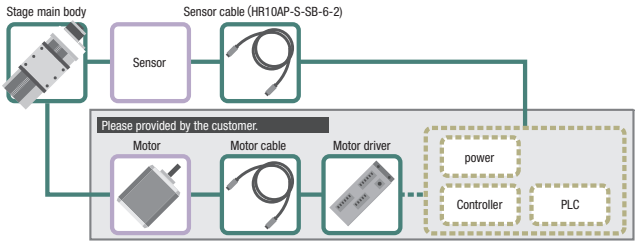

SPEC				
Model		KRB04017V-P28	KRB04017V-S38	KRB04017V-S40
Mechanical specification	Travel length	±8.5°		
	Table size	ϕ40mm		
	Travel mechanism	Ball screw ϕ6 lead 1		
	Guide	Combination angular ball bearing		
	Main materials-Finishing	Aluminum—Black almite finishing		
Accuracy specification	Resolution (Pulse)	≒0.0067° (Full)		
	MAX speed	102°/sec [15kHz]		
	Repeatability positioning accuracy	±0.003°		
	Load capacity	4.0kgf【39.2N】		
	Moment stiffness	0.52″/N・cm		
	Lost motion	0.003°		
	Backlash	0.01°		
	Parallelism	50μm		

SENSOR	
Limit sensor	Installed
Origin sensor	Installed
Slit origin sensor	—
Model	Photo microsensor EE-SX4320 (Omron Co., Ltd.)
Power voltage	DC5～24V ±10%
Consumption current	Total 60mA or less
Control output	NPN open collector output DC5~24V 8mA or less Residual voltage 0.3V or less when the load current is 2mA
Output logic	On detection (light shield condition): Output transistor OFF (Non-continuity)

※SPEC is reference for the standard model

URL:http://eng.surugaseiki.com/ E-mail:e-ost@suruga-g.co.jp
TEL.+81-3-6711-5014 FAX.+81-3-6711-5021

KRB04017V-P28

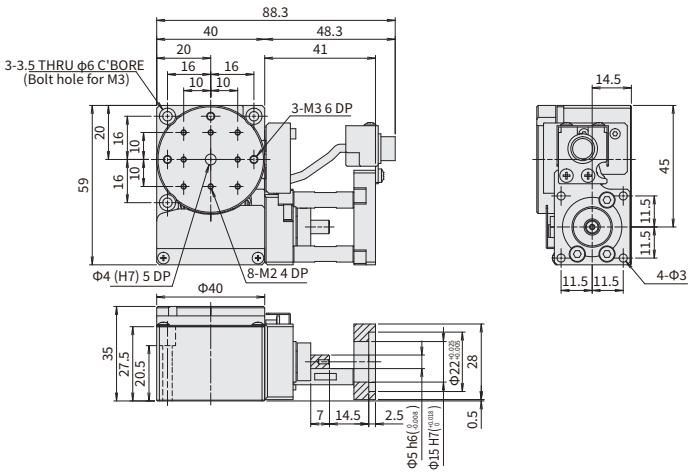

KRB04017V-S38

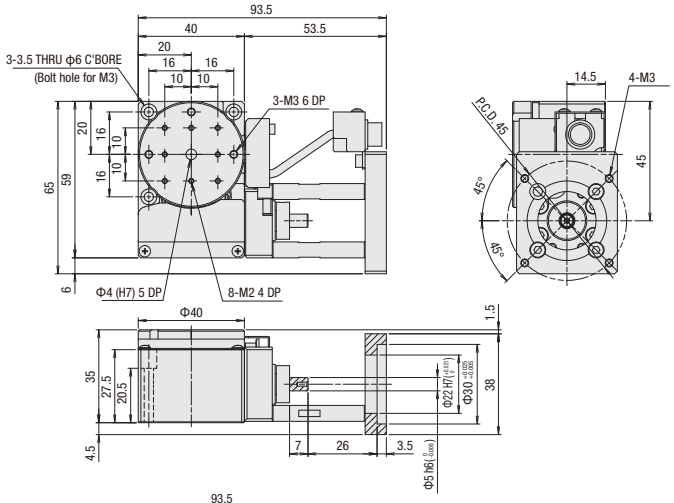

KRB04017V-S40

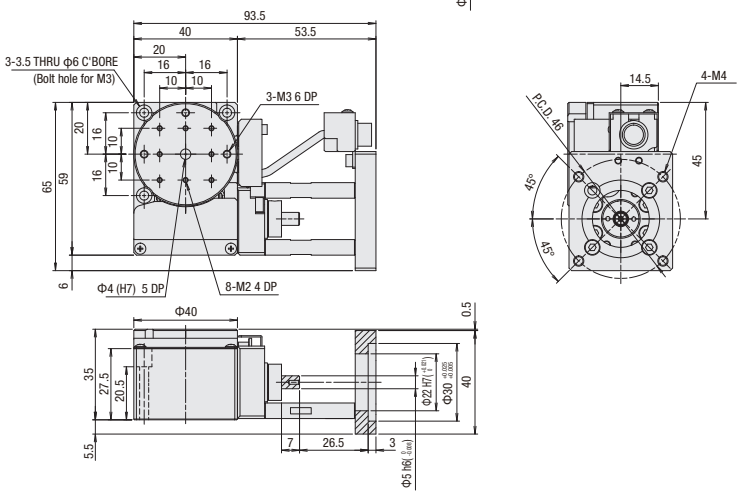

【In order to avoid damaging the motor-less product, please take the following precautions when handling them.】

◆Guarantee range

In difference to a conventional product, the guarantee range of the motor-less product will be limited due to no driving source, and notice the following attentions.

- Defect or trouble, according to motor mounting adjustment is not covered under the warranty.
- The accuracy assumes a motor test result for our inspection a guarantee level, and the accuracy after the motor mounting by the customer should be the guarantee outside.

◆Precautions and restricts on using

1.As load capacity and maximum speed depend on configuration of stage main body, please refrain from the use exceed the spec.
As distance is short between limit sensor and mechanical limit, collision with mechanical limit will incur due to over-run.
Please make sure the frequent repetition collision, it may adversely affect stage accuracy and rigidity.

2.The use with the high torque motor may give load more than the stage permission.
Please use for under 0.25N・m product or under the torque limit.

3. Very careful centering is required especially when a main body, motor and coupling is applied.
The operation that not enough centering may cause the damage or deterioration of the product early.
Please see the attached operating and assembly sheet for mounting adjustment.

4. Some products may need fixing part of the connector on your side.
Disconnection may occur before fixation due to a connector and the main body is connected only with lead. Please handle with care.

◆At the time of purchase

When placing an order, please be sure the above-mentioned, and on the premise of agreeing with guarantee coverage and attention / limitation items.

Sinemotion Rotary Stage ϕ60：KRB06011V

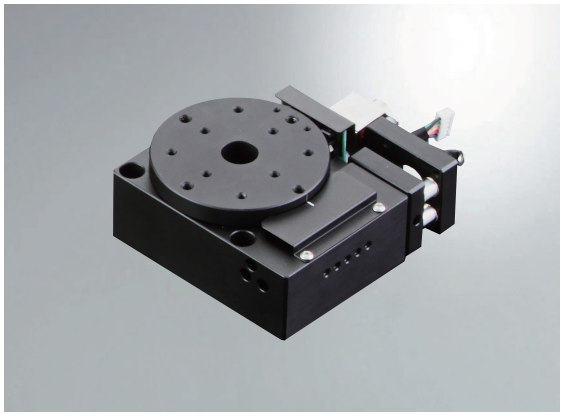

accessories			P28	S38	S40
■Motor bracket (installed on main body)			○		
■Coupling (with screws)			○		
■Screws	For Motor		4 of M2.5-6	4 of M3-12	2 of M4-12
	For Main Body	KRB04	3 of M3-25		
		KRB06	3 of M4-25		
■Sensor cable (2m One end loose)			○(HR10AP-S-SB-6-2)		

Model / Option code

KRB06011V-P28

1

1 Application Motor

Code	Speci cation
P28	□28 Steppingmotor
S38	□38 Servo motor
S40	□40 Servo motor

Pin allocation (Sensor)

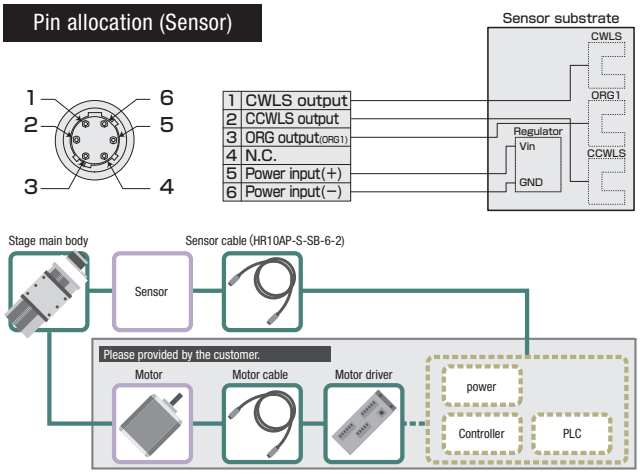

SPEC				
Model		KRB06011V-P28	KRB06011V-S38	KRB06011V-S40
Mechanical specification	Travel length	±5.5°		
	Table size	ϕ60mm		
	Travel mechanism	Ball screw ϕ6 lead 1		
	Guide	Combination angular ball bearing		
	Main materials-Finishing	Aluminum—Black almite finishing		
Accuracy specification	Resolution/Pulse	≒0.0042° (Full)		
	MAX speed	64°/sec [15kHz]		
	Repeatability positioning accuracy	±0.003°		
	Load capacity	6.0kgf【58.8N】		
	Moment stiffness	0.25″/N・cm		
	Lost motion	0.003°		
	Backlash	0.01°		
	Parallelism	50μm		

SENSOR	
Limit sensor	Installed
Origin sensor	Installed
Slit origin sensor	—
Model	Photo microsensor EE-SX4320 (Omron Co., Ltd.)
Power voltage	DC5～24V ±10%
Consumption current	Total 60mA or less
Control output	NPN open collector output DC5~24V 8mA or less Residual voltage 0.3V or less when the load current is 2mA
Output logic	On detection (light shield condition): Output transistor OFF (Non-continuity)

※SPEC is reference for the standard model

URL:http://eng.surugaseiki.com/ E-mail:e-ost@suruga-g.co.jp
TEL.+81-3-6711-5014 FAX.+81-3-6711-5021

KRB06011V-P28

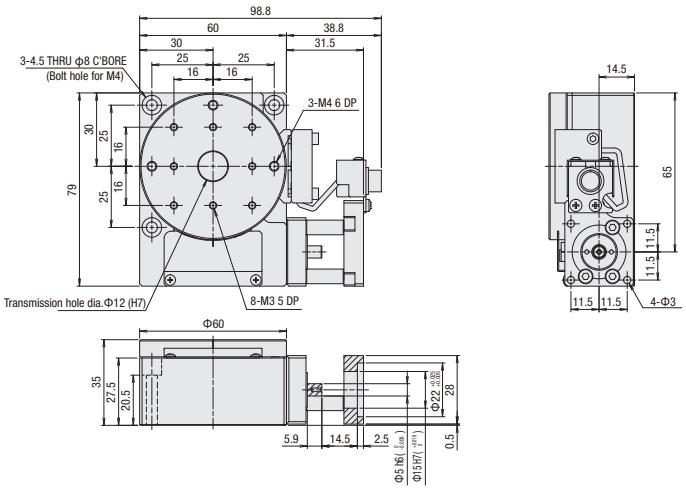

KRB06011V-S38

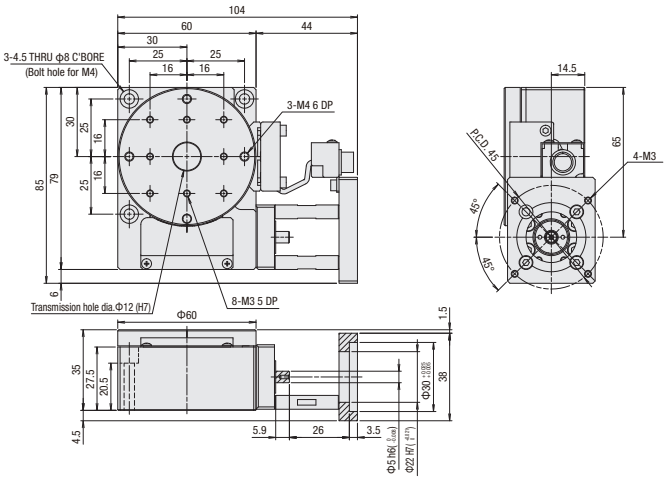

KRB06011V-S40

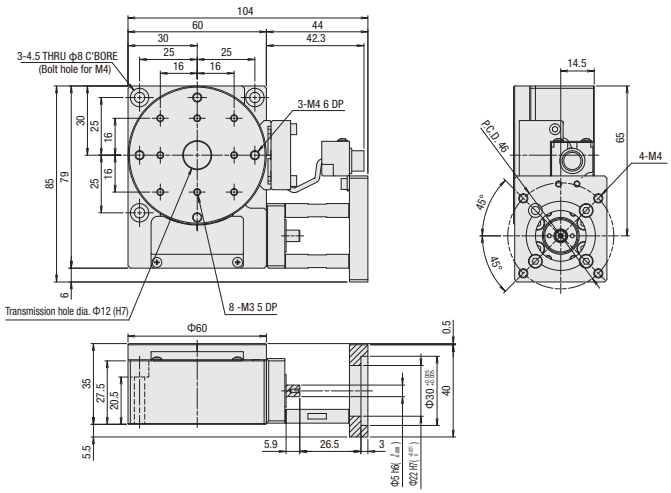

【In order to avoid damaging the motor-less product, please take the following precautions when handling them.】

◆Guarantee range

In difference to a conventional product, the guarantee range of the motor-less product will be limited due to no driving source, and notice the following attentions.

- Defect or trouble, according to motor mounting adjustment is not covered under the warranty.
- The accuracy assumes a motor test result for our inspection a guarantee level, and the accuracy after the motor mounting by the customer should be the guarantee outside.

◆Precautions and restricts on using

1.As load capacity and maximum speed depend on configuration of stage main body, please refrain from the use exceed the spec.
As distance is short between limit sensor and mechanical limit, collision with mechanical limit will incur due to over-run.
Please make sure the frequent repetition collision, it may adversely affect stage accuracy and rigidity.

2.The use with the high torque motor may give load more than the stage permission.
Please use for under 0.25N・m product or under the torque limit.

3. Very careful centering is required especially when a main body, motor and coupling is applied.
The operation that not enough centering may cause the damage or deterioration of the product early.
Please see the attached operating and assembly sheet for mounting adjustment.

4. Some products may need fixing part of the connector on your side.
Disconnection may occur before fixation due to a connector and the main body is connected only with lead. Please handle with care.

◆At the time of purchase

When placing an order, please be sure the above-mentioned, and on the premise of agreeing with guarantee coverage and attention / limitation items.

Rotary Stage ϕ39：KRW04360V

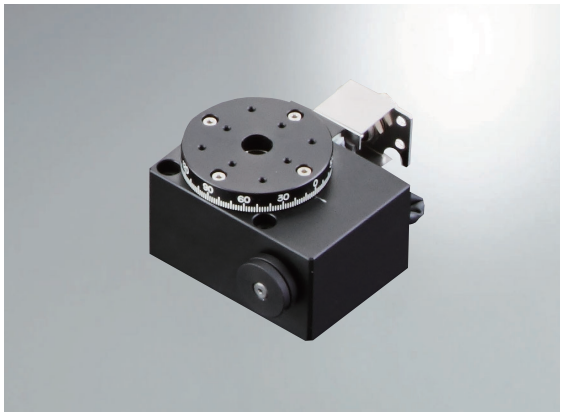

accessories			P28	S38	S40
■Motor bracket (installed on main body)			○		
■Coupling (with screws)			○		
■Screws	For Motor		2 of M2.5-6	4 of M3-12	2 of M4-12
	For Main Body	KRW04	3 of M3-30		
		KRW06	3 of M4-30		
■Sensor cable (2m One end loose)			○(HR10AP-S-SB-6-2)		
■Hex wrench (for motor mounting)			○	-	-

Model: **KRW04360V** - Option code: **P28**

1

1 Application Motor

Code	Speci cation
P28	□28 Steppingmotor
S38	□38 Servo motor
S40	□40 Servo motor

Pin allocation (Sensor)

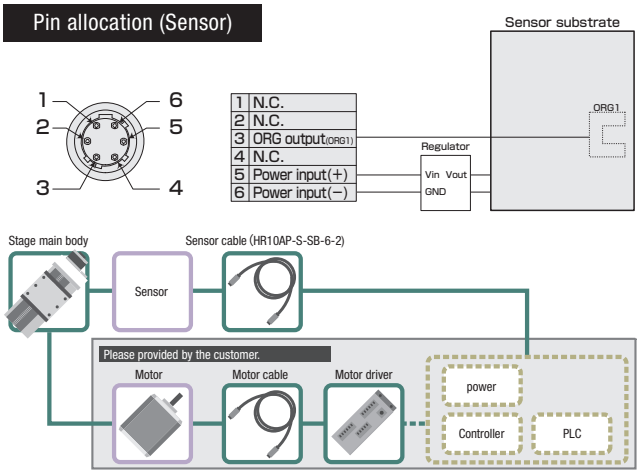

SPEC				
Model		KRW04360V-P28	KRW04360V-S38	KRW04360V-S40
Mechanical specification	Travel length	360°		
	Table size	ϕ39mm		
	Travel mechanism (Reduction ratio)	Worm gear (Reduction ratio 1/120)		
	Guide	Deep groove ball bearing		
	Main materials-Finishing	Aluminum—Black almite finishing		
Accuracy specification	Resolution/Pulse	0.006° (Full)		
	MAX speed	30°/sec [5kHz]		
	Positioning accuracy	0.05°		
	Repeatability positioning accuracy	±0.01°		
	Load capacity	3.0kgf【29.4N】		
	Moment stiffness	0.74″/N・cm		
	Lost motion	0.05°		
	Backlash	0.1°		
	Parallelism	50μm		
	Eccentricity	5μm		
	Runout	30μm		

SENSOR	
Limit sensor	—
Origin sensor	Installed
Slit origin sensor	—
Model	Photo microsensor EE-SX4320 (Omron Co., Ltd.)
Power voltage	DC5～24V ±10%
Consumption current	35mA or less
Control output	NPN open collector output DC5~24V 8mA or less Residual voltage 0.3V or less when the load current is 2mA
Output logic	On detection (light shield condition): Output transistor OFF (Non-continuity)

※SPEC is reference for the standard model

URL:http://eng.surugaseiki.com/ E-mail:e-ost@suruga-g.co.jp
TEL.+81-3-6711-5014 FAX.+81-3-6711-5021

KRW04360V-P28

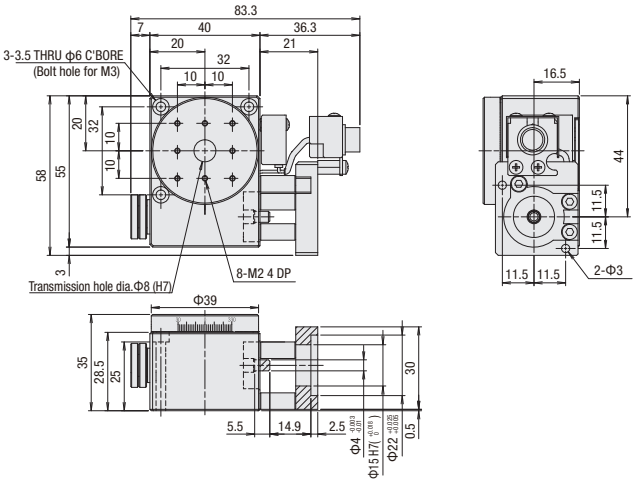

KRW04360V-S38

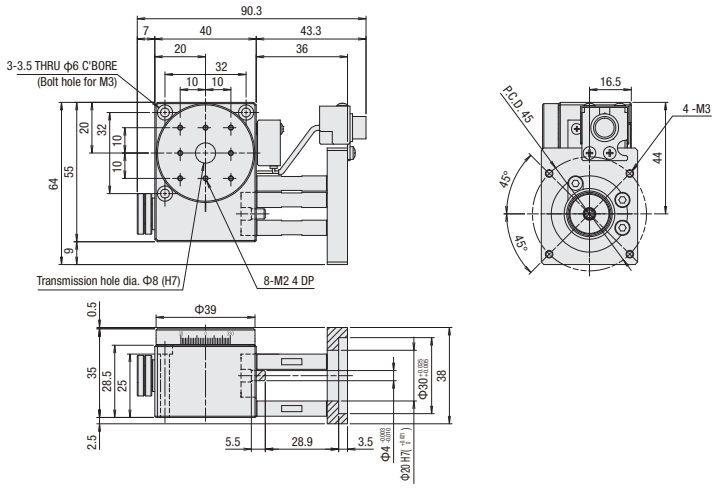

KRW04360V-S40

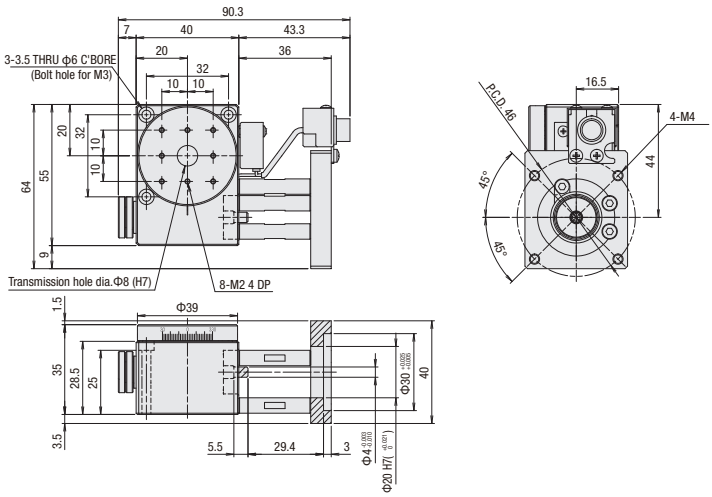

【In order to avoid damaging the motor-less product, please take the following precautions when handling them.】

◆Guarantee range

In difference to a conventional product, the guarantee range of the motor-less product will be limited due to no driving source, and notice the following attentions.

- Defect or trouble, according to motor mounting adjustment is not covered under the warranty.
- The accuracy assumes a motor test result for our inspection a guarantee level, and the accuracy after the motor mounting by the customer should be the guarantee outside.

◆Precautions and restricts on using

1.As load capacity and maximum speed depend on configuration of stage main body, please refrain from the use exceed the spec.
As distance is short between limit sensor and mechanical limit, collision with mechanical limit will incur due to over-run.
Please make sure the frequent repetition collision, it may adversely affect stage accuracy and rigidity.

2.The use with the high torque motor may give load more than the stage permission.
Please use for under 0.25N・m product or under the torque limit.

3. Very careful centering is required especially when a main body, motor and coupling is applied.
The operation that not enough centering may cause the damage or deterioration of the product early.
Please see the attached operating and assembly sheet for mounting adjustment.

4. Some products may need fixing part of the connector on your side.
Disconnection may occur before fixation due to a connector and the main body is connected only with lead. Please handle with care.

◆At the time of purchase

When placing an order, please be sure the above-mentioned, and on the premise of agreeing with guarantee coverage and attention / limitation items.

回転ステージφ59：KRW06360V

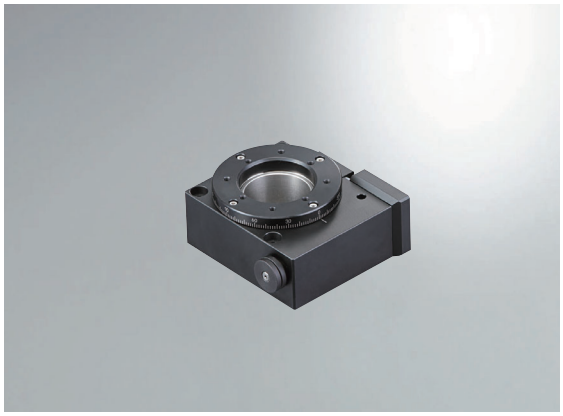

付属品			P28	S38	S40
■モータブラケット(本体取付済み)			○		
■カップリング(ねじ付属)			○		
■取付ねじ	モータ用		M2.5×6 2本	M3×12 4本	M4×12 2本
	本体用	KRW04	M3×30 3本		
		KRW06	M4×30 3本		
■センサケーブル(2m 片端バラ)			○(HR10AP-S-SB-6-2)		
■六角レンチ(モータ取付用)			○	-	-

型式　オプションコード

KRW06360V-P28

1

1 適用モータ

コード	仕様
P28	□28ステッピングモータ仕様
S38	□38サーボモータ仕様
S40	□40サーボモータ仕様

ピン配列

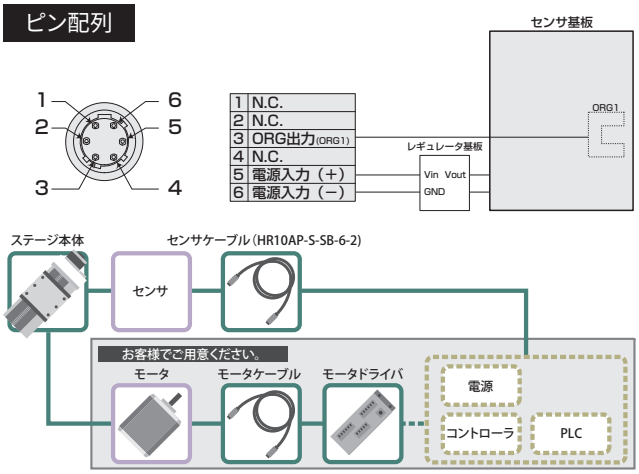

S P E C				
型式		KRW06360V-P28	KRW06360V-S38	KRW06360V-S40
メカ仕様	移動量	360°		
	ステージ面サイズ	φ59mm		
	移動機構(減速比)	ウォームギヤ(減速比1/180)		
	ガイド	深溝玉軸受け		
	主材質-表面処理	アルミ-黒アルマイト処理		
精度仕様	分解能/パルス	0.004° (Full)		
	MAXスピード	20°/sec[5kHz]		
	位置決め精度	0.05°以内		
	繰返位置決め精度	±0.01°以内		
	耐荷重	3.0kgf【29.4N】		
	モーメント剛性	0.2″/N・cm		
	ロストモーション	0.05°以内		
	バックラッシ	0.05°以内		
	平行度	50μm以内		
	偏芯量	5μm以内		
	面振れ量	30μm以内		
価格	1台	¥176,500	¥182,500	¥182,500
	2〜6台	¥147,500	¥153,500	¥153,500
	7台〜	¥143,500	¥149,500	¥149,500

セ ン サ	
リミットセンサ	—
原点センサ	有
スリット原点センサ	—
型式	フォトマイクロセンサ　EE-SX4320(オムロン㈱)
電源電圧	DC5〜24V　±10%
消費電流	35mA以下
制御出力	NPNオープンコレクタ出力DC5〜24V　8mA以下 残留電圧0.3V以下(負荷電流2mA時)
出力論理	検出(遮光)時：出力トランジスタOFF(非導通)

※ SPECは標準モータの値です。

URL:http://eng.surugaseiki.com/ E-mail:e-ost@suruga-g.co.jp
TEL.+81-3-6711-5014 FAX.+81-3-6711-5021

KRW06360V-P28

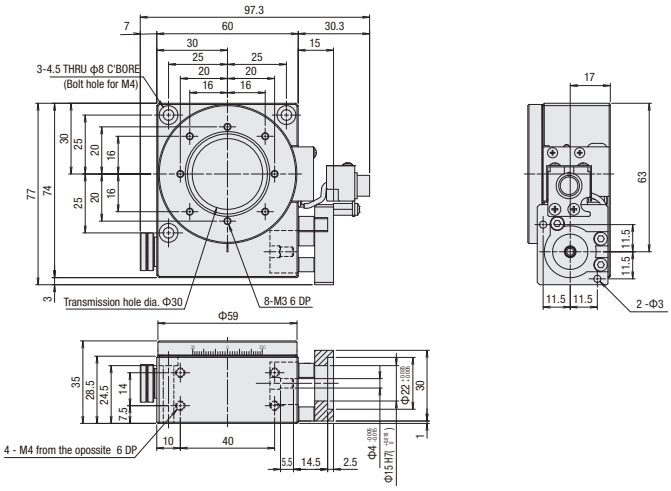

KRW06360V-S38

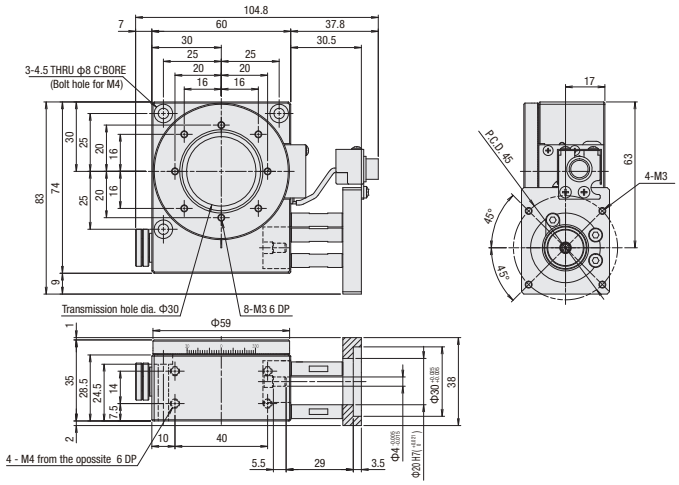

KRW06360V-S40

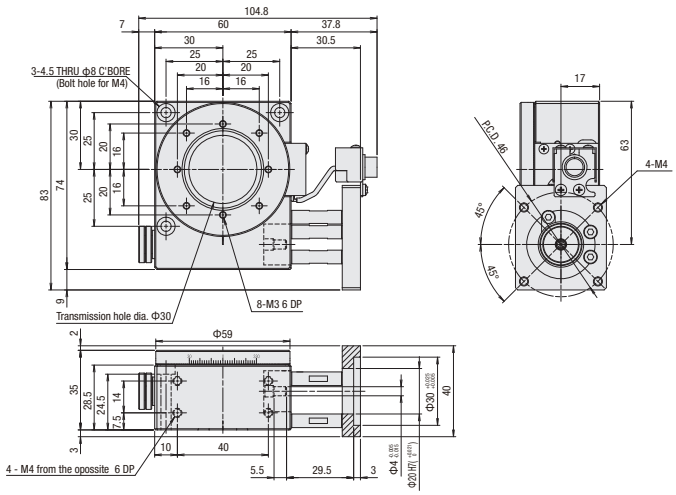

【In order to avoid damaging the motor-less product, please take the following precautions when handling them.】

◆Guarantee range

In difference to a conventional product, the guarantee range of the motor-less product will be limited due to no driving source, and notice the following attentions.

- Defect or trouble, according to motor mounting adjustment is not covered under the warranty.
- The accuracy assumes a motor test result for our inspection a guarantee level, and the accuracy after the motor mounting by the customer should be the guarantee outside.

◆Precautions and restricts on using

1.As load capacity and maximum speed depend on configuration of stage main body, please refrain from the use exceed the spec.
As distance is short between limit sensor and mechanical limit, collision with mechanical limit will incur due to over-run.
Please make sure the frequent repetition collision, it may adversely affect stage accuracy and rigidity.

2.The use with the high torque motor may give load more than the stage permission.
Please use for under 0.25N・m product or under the torque limit.

3. Very careful centering is required especially when a main body, motor and coupling is applied.
The operation that not enough centering may cause the damage or deterioration of the product early.
Please see the attached operating and assembly sheet for mounting adjustment.

4. Some products may need fixing part of the connector on your side.
Disconnection may occur before fixation due to a connector and the main body is connected only with lead. Please handle with care.

◆At the time of purchase

When placing an order, please be sure the above-mentioned, and on the premise of agreeing with guarantee coverage and attention / limitation items.